RESISTRON

ROPEX

RES-5006

User Guide

Important features

- PROFIBUS DP interface for complete control
- Automatic zeroing (AUTOCAL)
- Automatic optimisation (AUTOTUNE)
- Automatic configuration of the secondary voltage and current range (AUTORANGE)
- Automatic phase correction (AUTOCOMP)
- Automatic frequency adaptation
- Booster output standard
- Analogue output 0…10 VDC for ACTUAL temperature
- Alarm function with error diagnosis
- Heating element alloy and temperature range can be selected
- Wide voltage range for the use of 110…415 V
- Eight channels for administration of various calibration values
- Micro-USB interface for ROPEXvisual®

Version 2

01.02.21

ROPEX Industrie-Elektronik GmbH
Adolf-Heim-Str. 4
74321 Bietigheim-Bissingen (Germany)

Tel.: +49 (0)7142-7776-0
Fax: +49 (0)7142-7776-211

E-Mail: info@ropex.de
Internet: https://ropex.de
Data subject to change

Contents

1 Revision list 3

2 General information 3

2.1 Copyright 3
2.2 Intended use 3
2.3 Heatsealing band 4
2.4 Impulse transformer 4
2.5 Current transformer PEX-W4/-W5 4
2.6 Line filter 4
2.7 Maintenance 5
2.8 Transportation 5
2.9 Disposal 5
2.10 DECLARATION OF CONFORMITY . . 6

3 Use 7

4 Functional principle 7

5 Device features 7

6 Mounting and installation 8

6.1 Installation sequence 8
6.2 Installation notes 10
6.3 Power supply 11
6.4 Line filter 12
6.5 Current transformer PEX-W4/-W5 . . . 12
6.6 Connection diagram (standard) 14
6.7 Connection diagram with booster connection 15

7 Commissioning and operation 16

7.1 Device view 16
7.2 Device configuration 16
7.3 Replace and burn in heating element 18
7.4 Commissioning rules 19

8 Device functions 21

8.1 Display and operating elements 21
8.2 PROFIBUS communication 22
8.3 Device master data file (GSD) 22
8.4 PROFIBUS protocol 23
8.5 Input data 27
8.6 Output data 30
8.7 Parameter data 33
8.8 DPV1 protocol expansions 42
8.9 Undervoltage detection 48
8.10 Temperature display (actual value output) 49
8.11 Booster connection 50
8.12 USB interface for visualisation software ROPEXvisual® 50
8.13 AUX interface 51
8.14 Total cycles counter 51
8.15 Operating hours counter 51
8.16 Data storage for error messages and AUTOCAL 51
8.17 Integrated clock (date and time) 51
8.18 System monitoring/alarm output 52
8.19 Error messages 53
8.20 Error ranges and causes 57

9 Factory settings 58

10 Technical data 59

11 Dimensions 61

12 Modifications (MODs) 61

13 How to order 62

14 Index 64

1 Revision list

Version	Change
1	• Creation of documentation
2	• Extension communication protocol: Control bit constant regulation ratio ↳ section 8.5.7 "Constant regulation ratio (KS)" on page 29 • Extension parameter data: Startup delay after Reset (index 46/47) and maximum measurement pause (index 48) ↳ section 8.7 "Parameter data" on page 33 ↳ section 8.8.3 "DPV1 parameter data" on page 42 • Extension DPV1 parameter data: TCR Calculator in slot 1, index 190 to index 193 ↳ section 8.8.3 "DPV1 parameter data" on page 42 • New: section 8.7.15 "Restart delay after Reset" on page 40 • New: section 8.7.16 "Maximum measurement pause" on page 41 • New: section 8.7.2 "TCR Calculator" on page 35

2 General information

This RESISTRON® temperature controller is manufactured according to EN 61010-1. In the course of its manufacture it passed through quality assurance, whereby it was subjected to extensive inspections and tests. As a result of this, the product left our factory in perfect condition.
Please carefully read through the operating manual before using the RESISTRON® temperature controller. Keep the operating manual for later reference and make sure that information and functions important for the user are available.
The recommendations and warning notes contained in these operating instructions must be complied with, in order to guarantee safe operation.
The device can be operated within the limits indicated in the "Technical Data" without impairing its operational safety. Installation and maintenance may only be performed by technically trained, skilled persons who are familiar with the associated risks and warranty provisions.

2.1 Copyright

All contents, in particular texts, photographs and graphics, are protected by copyright. All rights, including to replication, publication, editing and translation, are reserved.

2.2 Intended use

RESISTRON® temperature controllers may only be used for heating and temperature control of heatsealing bands which are expressly approved for them, and providing the regulations, notes and warnings contained in these instructions are observed.
In case of non-observance or use contrary to the intended purpose, there is a risk that safety will be impaired or that the heatsealing band, electrical wiring, transformer etc. will overheat. This is the personal responsibility of the user.

2.3 Heatsealing band

The use of suitable heatsealing bands is a basic prerequisite for reliable and safe operation of the system.
The resistance of the heatsealing band which is used must have a positive minimum temperature coefficient in order to guarantee trouble-free operation of the RESISTRON® temperature controller.
The temperature coefficient must be specified as follows:

$$TCR = 10x10^{-4}K^{-1} \text{ or } K^{-1} \text{ or ppm/K}$$

e.g. Alloy A20: TCR = 1100 ppm/K
LEX3500: TCR = 3500 ppm/K
Vacodil: TCR = 1100 ppm/K

The RESISTRON® temperature controller must be set and coded according to the temperature coefficient of the heatsealing band.
The temperature coefficient must be taken from the ROPEX application report and must be set accordingly.

The use of incorrect alloys with a too low temperature coefficient and incorrect coding of the RESISTRON® temperature controller leads to uncontrolled heating of the heatsealing band, which will ultimately burn out!

The original heatsealing bands must be clearly identified by means of suitable markings as well as the connector geometry, length, or other means to ensure that replacement bands are identical.

2.4 Impulse transformer

A suitable impulse transformer is necessary in order to guarantee trouble-free operation of the control loop. This transformer must be designed according to EN 61558 or UL 5058 (isolating transformer with reinforced insulation) and have a one section bobbin. When the impulse transformer is installed, suitable touch protection must be provided in accordance with the national installation regulations for electrical equipment. In addition to this, water, cleaning solutions and conductive fluids must be prevented from seeping into the transformer.
Incorrect installation of the impulse transformer impairs electrical safety.

2.5 Current transformer PEX-W4/-W5

The current transformer supplied with the RESISTRON® temperature controller is an integral part of the control system.
Only the original ROPEX PEX-W4 or PEX-W5 current transformer may be used. Other transformers may cause the equipment to malfunction.
The current transformer may only be operated if it is correctly connected to the RESISTRON® temperature controller (see section "Startup and operation"). The relevant safety instructions contained in section "Power supply", must be observed. External monitoring modules can be used in order to additionally increase operating safety. They are not included in the scope of supply of the standard control system and are described in a separate document.

2.6 Line filter

ROPEX provides line filters in different power classes. The ROPEX application report lists the suitable line filter which can be ordered accordingly.
The use of an original ROPEX line filter is mandatory in order to comply with the directives mentioned in section 2.10 "DECLARATION OF CONFORMITY" on page 6. This device must be installed and connected

according to the instructions contained in section "Power supply" as well as the separate documentation enclosed with the line filter.

2.7 Maintenance

The controller requires no special maintenance. Regular inspection and / or tightening of the terminals – including the terminals for the winding connections on the impulse transformer – is recommended. Dust deposits on the controller can be removed with dry compressed air.

Dust deposits and dirt from liquids result in a loss of function. Accordingly, installation in a switch cabinet or terminal cabined with IP 54 is recommended.

2.8 Transportation

Store and transport the device in its original carton.
After transport, perform a visual inspection for possible damage.

2.9 Disposal

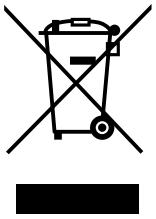

This device is subject to Directive 2012/19/EU concerning the reduction of the increasing amount of waste electrical and electronic equipment and the disposal of such waste in an environmentally sound way.
To guarantee proper disposal and / or the recover of reusable material, please take the device to a designated municipal collection point and observe local regulations.
Careless, uncontrolled disposal can cause damage to the environment and human health. By ensuring that your product is disposed of or recycled in a responsible way, you can help protect the environment and human health.

This device must not be disposed of as residual waste!

2.10 DECLARATION OF CONFORMITY

We hereby declare that the following device has been developed and manufactured in conformance with the directives cited below:

Designation:	RESISTRON/CIRUS temperature controller with accessories
Type:	With line filter and current transformer
Operating principle:	Impulse sealing of films and plastics

Compliant with following standards and directives:

EN 61010-1	Safety requirements for electrical equipment, control, and laboratory use
2014/35/EU	Low voltage directive
2014/30/EU	Electromagnetic compatibility directive
2011/65/EU	RoHS directive

Note:

This declaration of conformity certifies that the device/electronic itself complies with the above-mentioned directives. The CE mark on the device/electronic does not relieve the machinery manufacturer of his duty to verify the conformity of the completely installed, wired and operationally ready system in the machine with the EMC directive.

Comments:

RESISTRON/CIRUS temperature controllers are not independently operable devices. They are used by the machinery manufacturer to form a sealing system by adding EMC-relevant components such as filters, transformers, heatsealing bands and wiring. The final configuration may vary significantly in terms of performance and physical dimensions. All information provided by us in connection with the line filter is merely intended as a guide and is based on a typical measuring setup. It serves to demonstrate that compliance with the EMC directive can be achieved by using a line filter that is suitable for the overall system. The line filter and current transformer must, however, be determined on the basis of the respective application. We also wish to point out that the transformer which is used must be designed in accordance with VDE 0551/EN 61558 or UL 5058 for safety reasons.

July 12, 2020

J. Kühner (CEO)

ROPEX Industrie-Elektronik GmbH
Adolf-Heim-Str. 4
74321 Bietigheim-Bissingen (Germany)

3 Use

This RESISTRON® temperature controller is part of the “Series 5000”, whose main characteristic is microprocessor technology. All RESISTRON® temperature controllers provide temperature regulation of heating elements as are used in a variety of foil sealing processes.
The most common heating elements include:

- ribbon cables (straight and contoured)
- clincher bands
- beaded bands
- cutting wires
- heat-sealing blades
- soldering bows

The main application area is sealing or cutting of thermoplastics using the thermal impulse process.
The most common application areas are:

- vertical and horizontal form-fill-seal machines (VFFS and HFFS)
- bagging, filling and sealing machines
- film-wrapping machines
- bag-production machines
- group packaging machines
- foil sealing devices
- spout and hose sealing
- and much more

4 Functional principle

The resistance of the heating element, which changes with temperature, is measured by means of current and voltage measurement, displayed and compared with the specified setpoint value. Measurements are made 50 times per second in a 50 Hz network, 60 times per second in a 60 Hz network.
The primary voltage of the impulse transformer is adjusted following the leading edge principle if the measured values deviate from the setpoint value. The related current change in the heating element results in a rise in temperature and change of resistance. The change in resistance is measured and evaluated by the RES-5006. The temperature controller adjusts the control variables according to the change and the set setpoint.
Even the smallest thermal loads on the heating element are recorded and can be quickly and precisely corrected. Measurement of pure electric variables, together with the high measurement rate, result in a highly dynamic thermoelectric control circuit. The principle of primary-side transformer control proves to be especially advantageous as it permits a very large secondary current range with low power loss. This permits an optimal adjustment to the load and thus the desired dynamics with extremely compact device measurements.

5 Device features

The RESISTRON® temperature controller RES-5006 is equipped with a PROFIBUS-DP interface. Through this interface, all functions and parameters can be parameterised by means of the higher level machine controller. In addition, important controller information is queried and can be processed accordingly.

The ACTUAL temperature of the heating element is output through the PROFIBUS interface and through an analogue output 0…10 VDC. The real heating element temperature can be visualised on an external display instrument (e.g. ATR-x) or via the operating unit of the machine controller.
The RES-5006 has an integrated error diagnosis that checks both the external system (heating element, wiring, etc.) and the internal electronics. A differentiated error message is output through the PROFIBUS interface in case of malfunction.
To increase operational security and immunity to interference, all PROFIBUS signals from the controller and heating circuit are electrically isolated.
Adjustment for different heating element alloys (alloy A20, Vacodil, etc.) and setting of the temperature range to be used (0…300 °C or 0…500 °C) can be made through coding switches on the temperature controller itself or through the PROFIBUS interface.
The compact design of the RESISTRON® temperature controller RES-5006 as well as the plug-in connecting terminals make mounting and installation easier.
An overview of the most important features and functions:

- Easy calibration of the heating element through AUTOCAL, the automatic zero-point setting.
- Eight channels permit switching of the calibration parameters during tool change.
- High control dynamics through AUTOTUNE, automatic adjustment to the controlled system.
- High flexibility: The AUTORANGE function covers a secondary voltage range of 0.4 V to 120 V and a current range of 30 A to 500 A.
- Automatic adjustment to the network frequency in the range of 47 Hz to 63 Hz.
- Wide voltage range for flexible use from 110 VAC to 415 VAC
- Easy and convenient system diagnosis and process visualisation through the free, downloadable software ROPEXvisual®
- Comprehensive error diagnosis over the PROFIBUS-DP interface
- Booster output available for connecting a switching amplifier
- High process security through comprehensive options for evaluating the parameter data (e.g. temperature diagnosis or heat-up time monitoring)

6 Mounting and installation

See also section 2 "General information" on page 3.

Mounting, installation and commissioning may only be performed by qualified and trained persons who are familiar with the related hazards and warranty stipulations.

The supply voltage to the machine side must lie within the permitted voltage and frequency range of the RESISTRON® temperature controller. Otherwise, there is the danger of a defect.

6.1 Installation sequence

Proceed as follows during mounting and installation of the RESISTRON® temperature controller:

1. Switch off network voltage and 24 VDC power supply; verify lack of voltage.
2. Mounting of the RESISTRON® temperature controller in the switching cabinet on a TS35 top hat rail (in accordance with DIN EN 50022). If several devices are mounted, the minimum distance specified in section 10 "Technical data" on page 59 must be maintained.
3. Wiring of the system in accordance with the regulations in section 6.3 "Power supply" on page 11, section 6.6

"Connection diagram (standard)" on page 14 and the ROPEX application report. The specifications in section 6.2 "Installation notes" on page 10 must also be observed.
Cables that are connected to control or measurement connections may only run within the building.

4. During installation, an overcurrent protection device with max. 10 A must be provided, e.g.:
   - circuit breaker in accordance with EN 60898 (characteristic B, C, D, K or Z)
   - circuit breaker in accordance with UL489 (*) (characteristic B, C, D, K or Z)
   - protective fuse gG in accordance with IEC 60269
   - protective fuse “Class CC” or “Class J” in accordance with UL 248 (*)

   The overcurrent protective devices marked with (*) must be used in installations falling under the UL regulations.

   If this overcurrent protective device is not sufficient for the sealing application, two separate overcurrent protective devices must be provided for the controller and the sealing application (↳ ROPEX application report).
   The overcurrent protective device must be located in the immediate vicinity of the device.
   In the ROPEX application report, the smallest possible specification for this overcurrent protective device is specified based on the calculated currents. If the protective device is dimensioned differently, the current carrying capacity of the components used (e.g. cable, impulse transformer, etc.) must be adjusted accordingly.
5. A disconnect device, which must be marked as belonging to the system and attached in an easily reachable position, must be provided In the installation.
   If a circuit breaker is used, it can take over the function of the disconnect device.
6. Connect the RESISTRON® temperature controller to the PROFIBUS master with a connecting cable in accordance with IEC 61158.

Check all connection terminals of the system – including the terminals for the coil wires on the impulse transformer – that they are seated firmly.

7. Check the wiring in accordance with the applicable national and international installation and setup stipulations.

6.2 Installation notes

Sample depiction

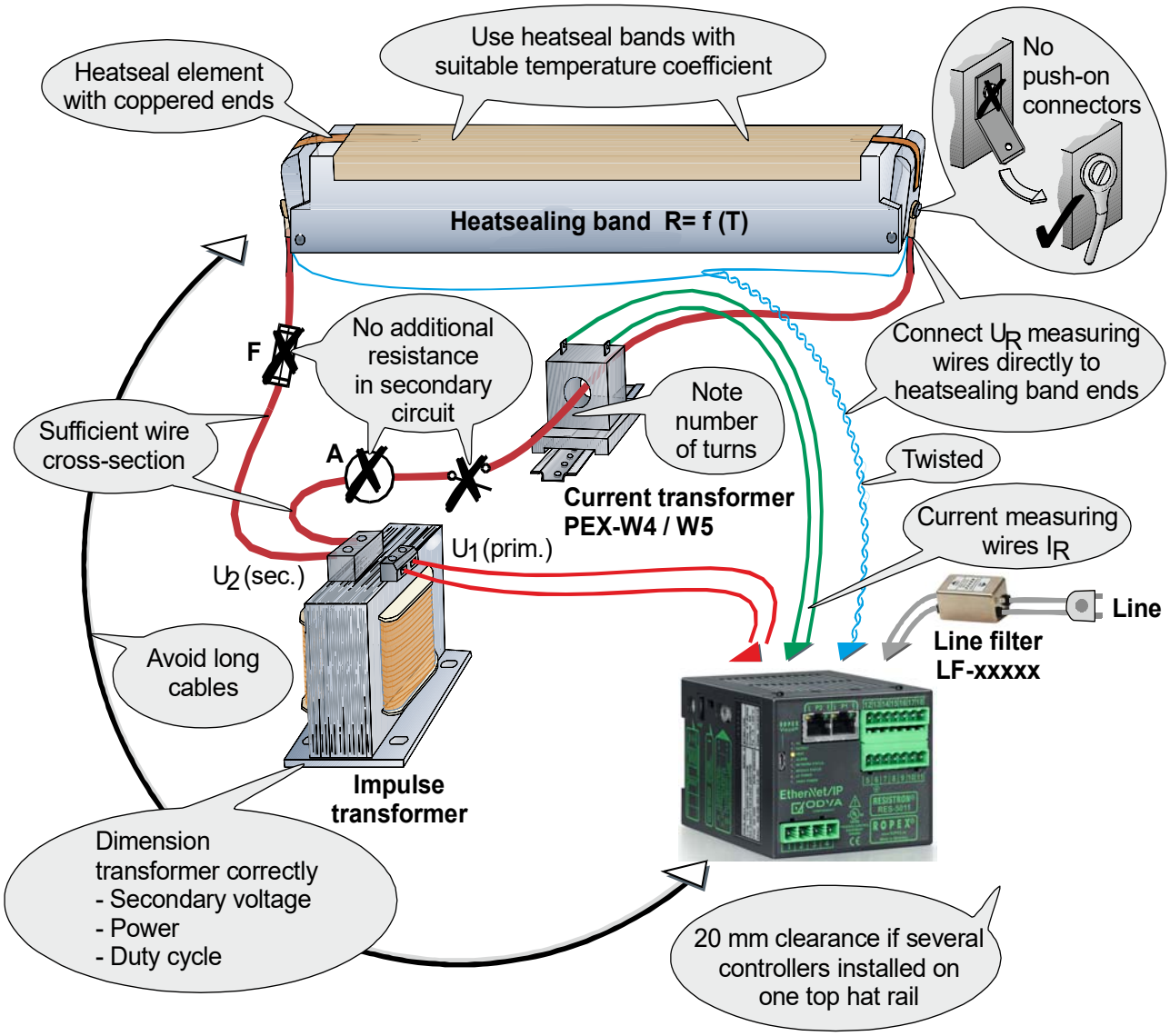

6.3 Power supply

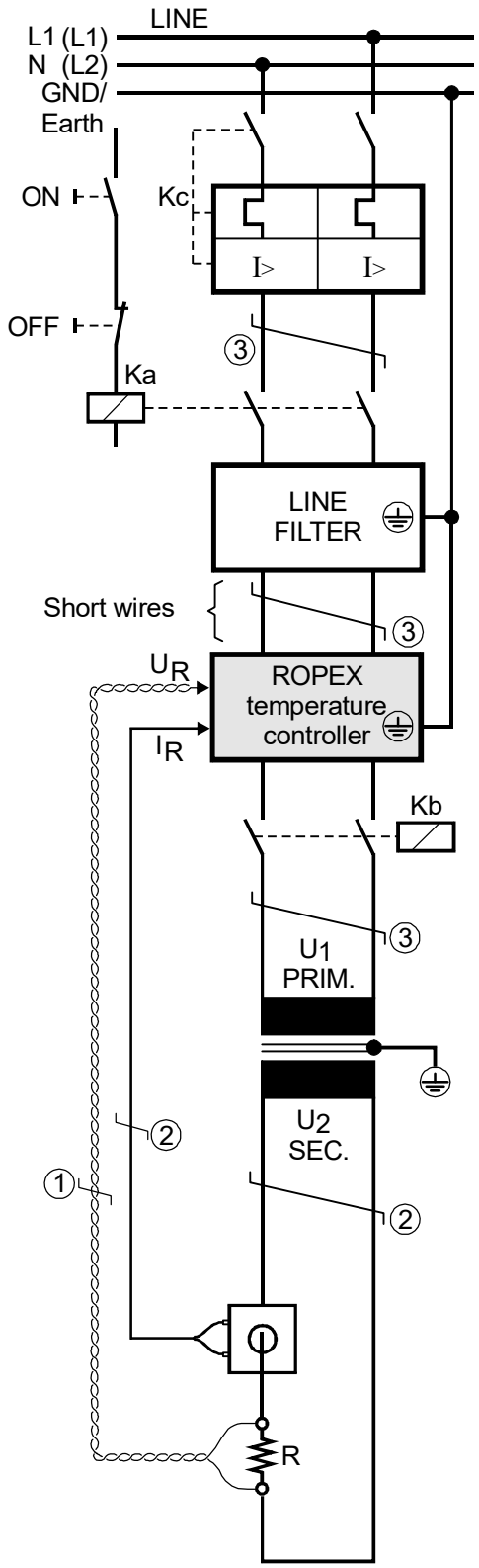

Line

Over-current protection
Double-pole circuit-breaker or fuses,
(↳ ROPEX Application Report)

⚠ Short-circuit protection only. RESISTRON® temperature controller not protected.

Relay Ka
For "HEAT ON - OFF" function (all-pole) or "EMERGENCY STOP".

Line filter
The filter type and size must be determined according to the load, the transformer and the machine wiring (↳ ROPEX Application Report).

⚠ Do not run the filter supply wires (line side) parallel to the filter output wires (load side).

RESISTRON® temperature controller

Relay Kb
Load break (all-pole), e.g. in combination with the alarm output of the temp. controller (ROPEX recommendation).

⚠ When using a series resistor RV-....-1 the relay Kb shall be installed.

Impulse Transformer
Designed according to EN 61558 (isolating transformer with reinforced insulation). Connect core to ground.

⚠ Use transformers with a one section bobbin. The power, duty cycle and voltage values must be determined individually according to the application (↳ ROPEX Application Report and "Accessories" leaflet for impulse transformers).

Wiring
The wire cross-sections depend on the application (↳ ROPEX Application Report).

① Wires must always be twisted (min. 20 turns/meter).
② These wires must be twisted (min. 20 turns/meter) if several control loops are laid together ("crosstalk").
③ Twisting (min. 20 turns/meter) is recommended to improve EMC.

6.4 Line filter

To comply with EMC directives – corresponding to EN 50081-1 and EN 50082-2 – RESISTRON control loops must be operated with line filters.
These filters damp the reaction of the phase-angle control on the line and protect the controller against line disturbances.

The use of a suitable line filter is part of the standards conformity and a prerequisite of the CE mark.

ROPEX line filters are specially optimized for use in RESISTRON control loops. Providing that they are installed and wired correctly, they guarantee compliance with the EMC limit values.
You can find the exact specification of the line filter in the ROPEX Application Report calculated for your particular heatsealing application.
For more technical information: ↳ "Line filter" documentation.
It is permissible to supply several RESISTRON control loops with a single line filter, providing the total current does not exceed the maximum current of the filter.
The wiring instructions contained in section 6.3 "Power supply" on page 11 must be observed.
Example drawing for LF-06480:

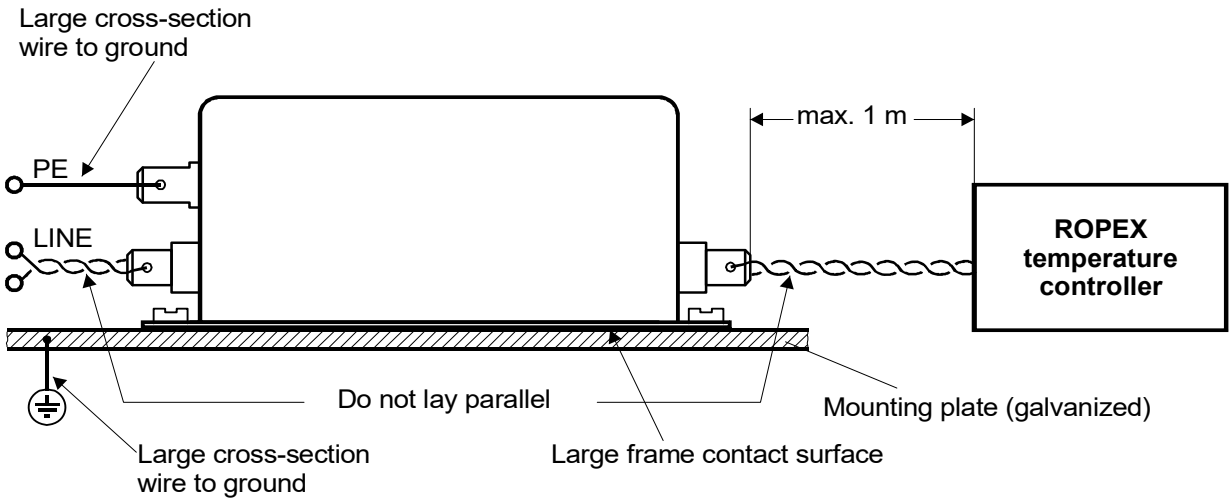

6.5 Current transformer PEX-W4/-W5

The PEX-W4/-W5 current transformer supplied with the RESISTRON® temperature controller is an integral part of the control system. The current transformer may only be operated if it is connected to the temperature controller correctly (↳ section 6.3 "Power supply" on page 11).

6.5.1 PEX-W4

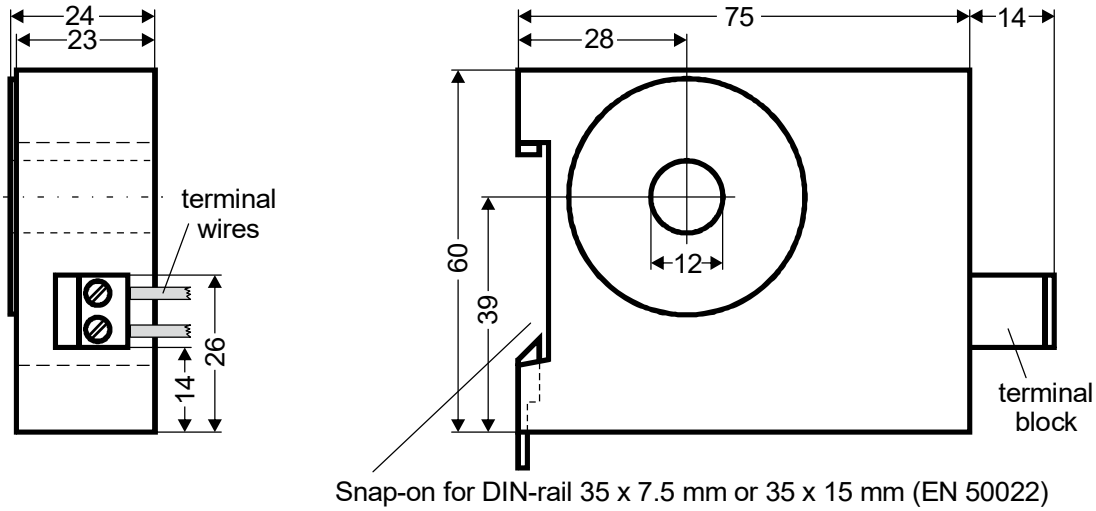

6.5.2 PEX-W5

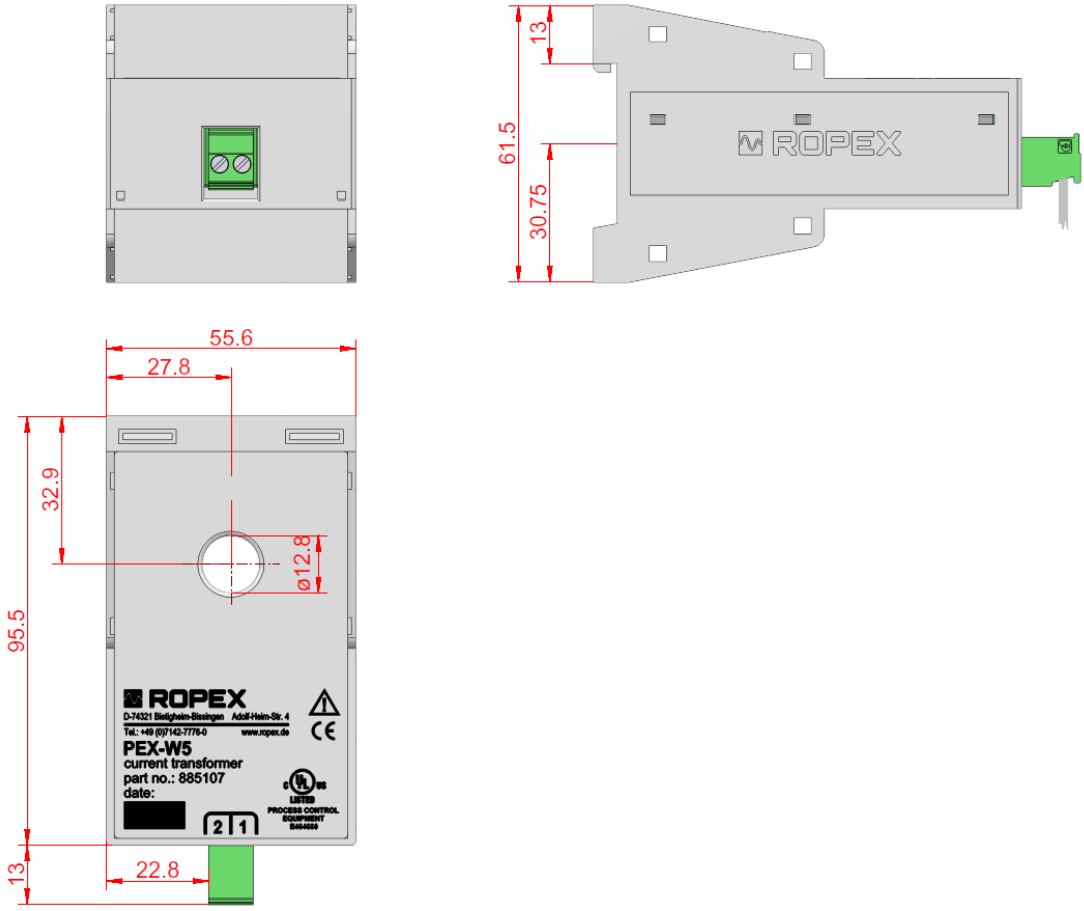

Mounting on DIN-rail 35 x 7.5 mm or 35 x 15 mm (EN 50022).
If the high-current wire cannot be routed through the opening provided, an HCB-1 high-current rail must be used.

6.6 Connection diagram (standard)

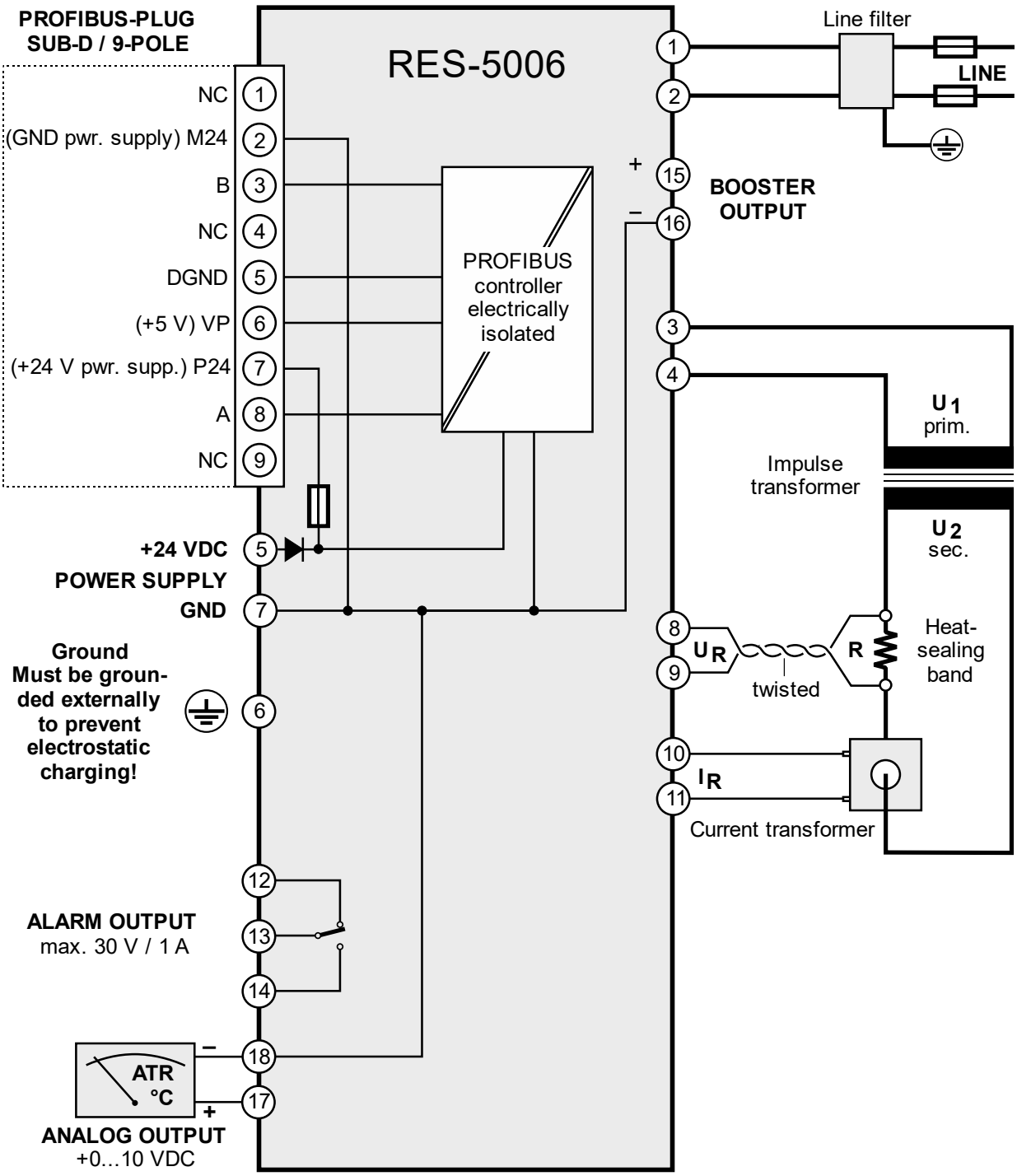

6.7 Connection diagram with booster connection

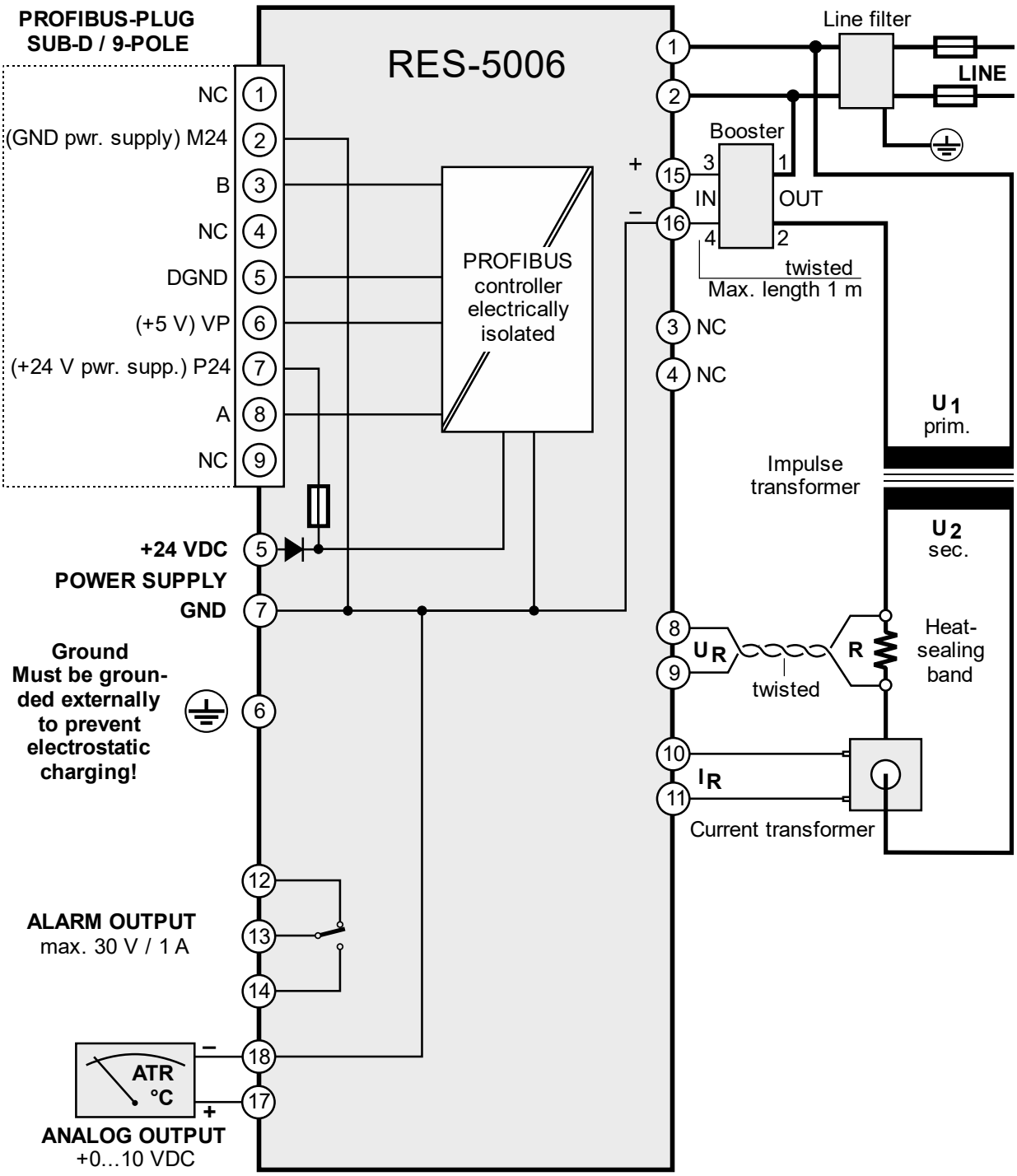

7 Commissioning and operation

7.1 Device view

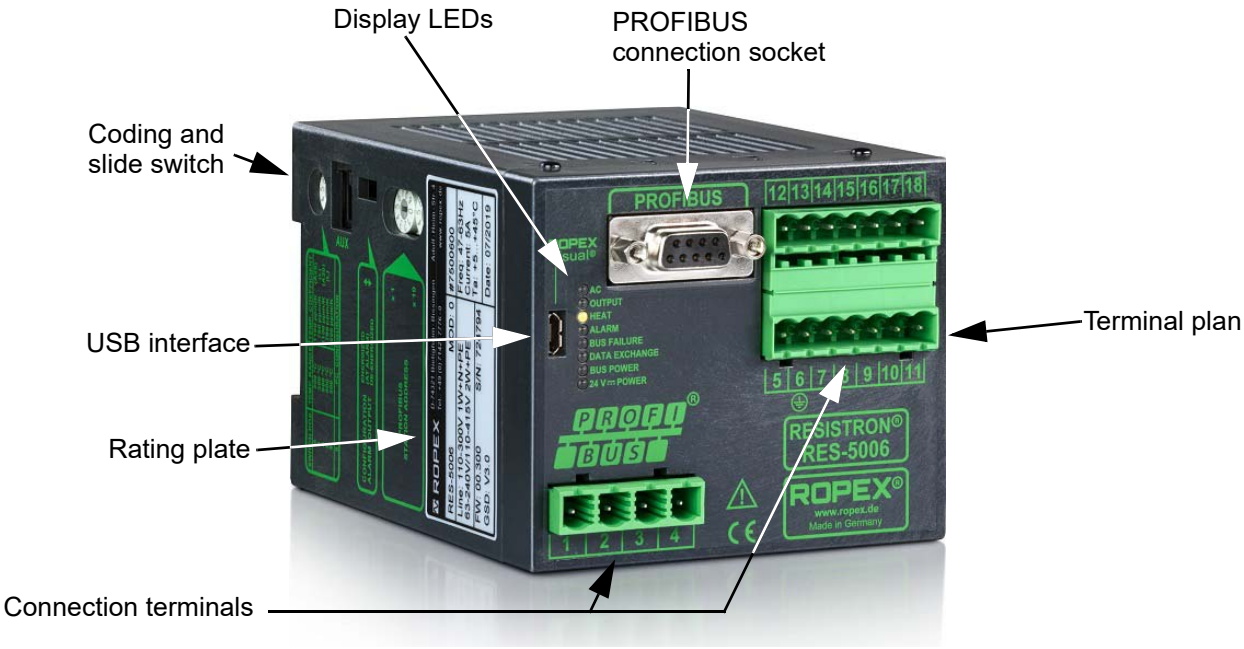

7.2 Device configuration

The controller must be switched off to configure the coding switch and the slide switch.

7.2.1 Configuration of the ranges for secondary voltage and current

The ranges for secondary voltage and current are configured automatically when automatic calibration (AUTOCAL) is carried out. Configuration takes place in the voltage range of 0.4 VAC to 120 VAC and in the current range from 30 A to 500 A. If voltage and/or current is outside the allowed range, a detailed error message is output by the controller (↳ see section 8.19 "Error messages" on page 53).
For secondary currents I_2 less than 30 A, the secondary high-current line must be guided 2 times (or several times) through the transformer PEX-W4 or PEX-W5 (↳ ROPEX application report).

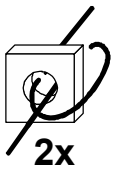

7.2.2 Configuration of the rotary coding switch for temperature range and alloy

Switch position	Temp. range	Temp. coefficient	Band alloy
0	300°C	1100ppm/K	e.g. A20
1	300°C	780ppm/K	e.g. L
4	500°C	1100ppm/K	e.g. A20
5	500°C	780ppm/K	e.g. L
8	300°C	3500ppm/K	
9	PC-CONFIGURATION		

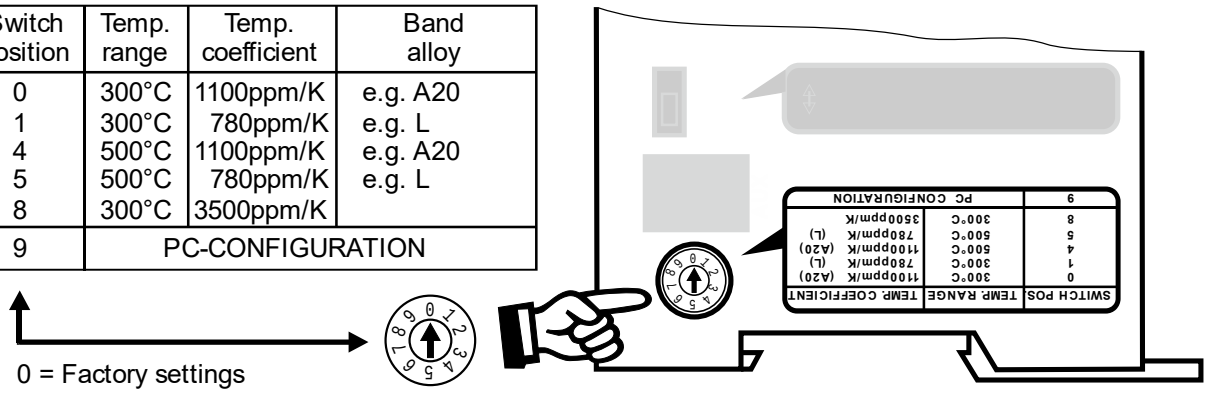

The setting of the rotary coding switch for temperature range and alloy can be overwritten by the parameter data (↳ section 8.7 "Parameter data" on page 33).

When the switch position “9” is selected, additional temperature ranges and alloys can be set through the ROPEX visualisation software (↳ section 8.12 "USB interface for visualisation software ROPEXvisual®" on page 50).

7.2.3 Configuration of the station address

On these two rotary coding switches, the station address of the RES-5006 can be set in the PROFIBUS network from 1 to 99. Changes do not become effective until after switch-on.
With the switch setting 00, the station address with a class 2 master can be set over PROFIBUS with the SSA service (set slave address). If no address has been assigned, the device has the standard address 126. The address assigned through SSA remains stored in the device. As soon as a station address not equal to 00 is set on the rotary coding switches and the 24 VDC power supply of the RES-5006 is switched off and back on again, the stored address assigned through SSA is erased and the controller uses the set station address. In switch setting 00, the standard address is then 126 again.

Rotary encoder switch	Station address
00	Changeable through SSA in the range 0…126
01…99	• Fixed address in the range 1…99 • Stored address is reset to 126

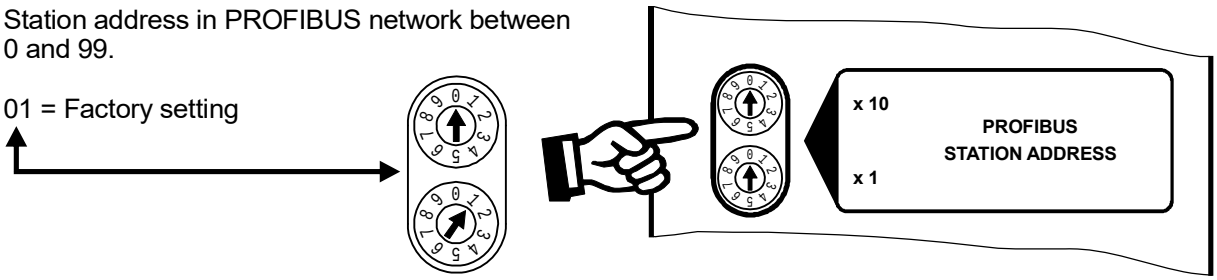

With the help of address setting via the rotary coding switch, it is possible to carry out a device change in an existing machine without a programming tool. Only the same setting of the rotary coding switch can be made in the replacement device.

7.2.4 Configuration of the alarm relay

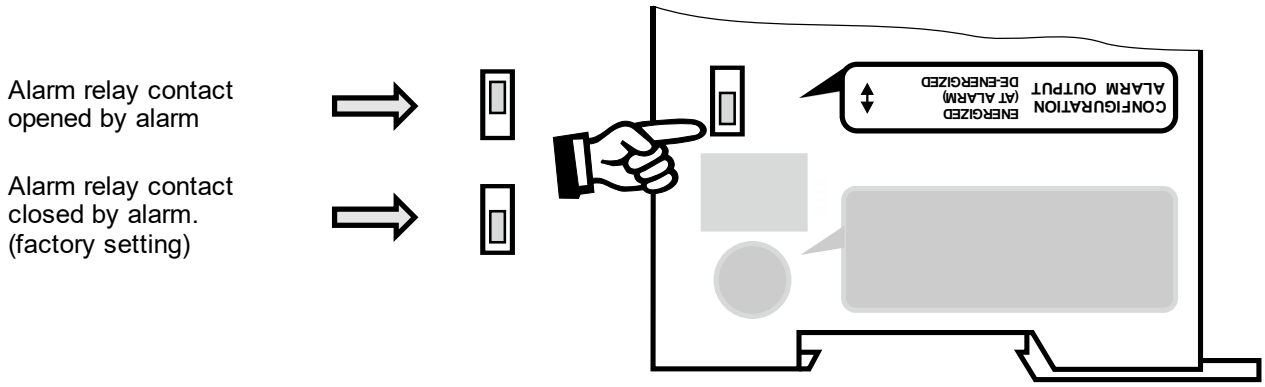

When the “Alarm relay contact opens with Alarm/PC CONFIGURATION” is selected, additional configurations for the behaviour of the alarm output can be set through the ROPEX visualisation software (↳ section 8.12 "USB interface for visualisation software ROPEXvisual®" on page 50).

7.3 Replace and burn in heating element

7.3.1 Burning in the heating element

The heating element is an important component in the control circuit, as it is both a heating element and sensor. The geometry of the heating element cannot be discussed here due to its diversity. Accordingly, only some important physical and electrical characteristics are pointed out here:
The measurement principle used here requires from the heating element alloy a suitable temperature coefficient TCR. A TCR that is too small results in vibrating of the controller or overheating of the heating element.
If the TCR is large, the controller must be calibrated for it. The RESISTRON® temperature controller is suitable for temperature coefficients in the range 400…4000 ppm/K.
The first time it is heated to approx. 200…250 °C, the usual alloy undergoes a one-time change in resistance (burn-in effect). The cold resistance of the heating element is reduced by about 2…3%. But this small change in resistance generates a zero point error of 20…30°C. The zero point must therefore be corrected after a few heating cycles, that is, the AUTOCAL function must be carried out again.
To do this, the system must be cooled off completely.
After the first heating and zeroing, the heating element is burned in and the change of resistance stabilised. The heating element can now be used.
The burn-in effect described here does not need to be considered if the manufacturer pretreated the heating element for this purpose.

A damaged or worn-out heating element may no longer be used due to an irreversible TCR change.

A very important design measure is copper-coating or silver-coating of the heating element ends. The thermal characteristics change in this range through coating of the heating element ends. As a result, the ends remain cold, which permits exact temperature control and increases the useful life of the heating element.

7.3.2 Changing the heating element

To change the heating element, the supply voltage must be disconnected from the RESISTRON® temperature controller on all pins.

The heating element must be changed in accordance with the manufacturer's instructions.

After every heating element change, zeroing must be performed with the AUTOCAL function and with a cold heating element (and cold surroundings: i.e. silicone, PTFE cover, sealing bar, among others) to compensate for production-related tolerances of the heating element resistance.
If a new heating element is used, the above-described procedure for burning in must be performed.

7.4 Commissioning rules

Observe here section 2 "General information" on page 3 and section 3 "Use" on page 7.

Mounting, installation and commissioning may only be performed by qualified and trained persons who are familiar with the related hazards and warranty stipulations.

7.4.1 Initial startup

Requirement: Device is correctly mounted and connected (↳ section 6 "Mounting and installation" on page 8).
Proceed as follows when starting up the controller for the first time:

1. Switch off network voltage and 24 VDC power supply; verify lack of voltage.
2. Set desired station address in the PROFIBUS network (↳ section 7.2 "Device configuration" on page 16).
3. Integrate GSD file in the PROFIBUS master (↳ chap. 8.3) and select desired communication module (protocol "compact", "expanded" or "complete"), possibly change parameter data and start communication.
4. Make sure that the higher-level controller does not send values not equal to zero to the RESISTRON® temperature controller.
5. Switch on the network voltage and 24 VDC power supply in any order.
6. After the voltage is switched on, the yellow "AUTOCAL" LED lights up for about 0.3 seconds and displays the correct switch-on process of the controller. As long as no network voltage is present, this LED flashes slowly (1 Hz).

At switch-on, if in addition to the yellow "AUTOCAL" LED the red "ALARM" LED lights up for 0.3 seconds, the configuration with the visualisation software has been changed for this controller (↳ section 8.12 "USB interface for visualisation software ROPEXvisual®" on page 50). The controller's configuration must be checked to avoid malfunctions before continuing with commissioning.

7. The green "DATA EXCHANGE" LED lights up when the PROFIBUS communication is active.
8. The following statuses can then result:

"ALARM" LED	"OUTPUT" LED	MEASURE
OFF	Short pulses every 1.2 seconds	Continue with item 9
FLASHES quickly (4 Hz)	OFF	Continue with item 9
Permanently ON	OFF	Error diagnosis (↳ chap. 8.19)

9. With a cold heating element, activate the AUTOCAL function by setting the AC bit (**A**UTO**C**AL) in the

PROFIBUS protocol (↳ section 8.4 "PROFIBUS protocol" on page 23). The yellow “AUTOCAL” LED lights up for the duration of the calibration process (approx. 10…15 seconds). During this process, the AA bit (**A**UTOCAL **a**ctive) is set and a voltage of 0 VDC is output on the actual value output (terminal 17+18). A connected ATR-x shows 0…3 °C.
After zeroing is completed, the “AUTOCAL” turns off and the AA bit is erased again. A voltage of 0.66 VDC (in 300 °C range and Autocal temperature = 20 °C) or 0.4 VDC (in 500 °C range) is reached at the actual value output. A connected ATR x must be on the “Z” marking.
If zeroing is not performed correctly, the AL bit (**Al**arm active) is set and the red “ALARM” LED flashes slowly (1 Hz). Then the configuration of the controller is not correct (↳ section 7.2 "Device configuration" on page 16, ROPEX application report). After the device configuration is correct, perform zeroing again.

10. After successful zeroing, specify a defined temperature over the PROFIBUS protocol (setpoint) and set the ST bit. The RA bit (**R**egulation **a**ctive) is now active and the “HEAT” LED illuminated. The heat-up and control procedure can be observed at the actual value output:
It is functioning correctly when the temperature (i.e. signal change at the analogue output or the actual value in the PROFIBUS protocol) is steady, that is, does not jump, oscillate or even go briefly in the wrong direction. Such action indicates an incorrect placement of the U_R measurement line.
When an error message is issued, proceed according to section 8.19 "Error messages" on page 53.
11. Burning in the heating element (↳ section 7.3 "Replace and burn in heating element" on page 18) and repeat AUTOCAL function.

7.4.2 Placing back into operation after changing the heating element

When changing the heating element, proceed according to section 7.3 "Replace and burn in heating element" on page 18.

Pay attention to correct alloys, dimensions and copper coating of the new heating element to avoid malfunctions and overheating.

Continue with chap. 7.4 item 4 to item 11.

8 Device functions

See also section 6.6 "Connection diagram (standard)" on page 14.

8.1 Display and operating elements

AC (yellow LED)	**Lit while AUTOCAL process is executing.**
OUTPUT (green LED)	**Indicates pulses in measurement mode. In control mode, luminous intensity is proportional to heating current.**
HEAT (yellow LED)	**Lit during heating phase.**
ALARM (red LED)	**Lit or blinking to indicate fault.**

BUS FAILURE (red/green LED)	**Lit or blinking if no connection exists to PROFINET.**
DATA EXCH (red/green LED)	**Lit (green) while data exchange with PROFINET controller.**
BUS POWER (green LED)	**Lit if internal power supply for PROFINET interface is OK.**
24 V⎓POWER (green LED)	**Lit if external 24 VDC power supply is present.**

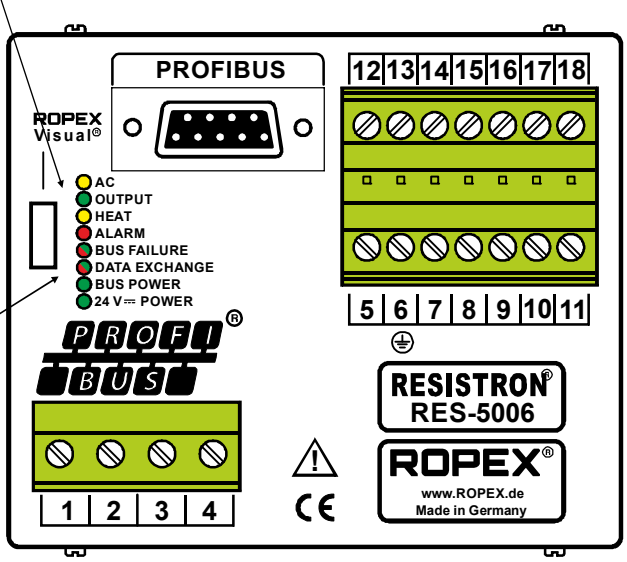

The LEDs display additional operating statuses of the controller besides the functions in the above illustration. These are shown in detail in the following table:

LED	Flashes slowly (1 Hz)	Flashes quickly (4 Hz)	On permanently
AC (AUTOCAL) (yellow)	No PROFIBUS communication or RS bit set (reset)	AUTOCAL requested, but function is blocked	AUTOCAL is carried out
	LED flashes with a different frequency: Incorrect (too low) supply voltage		
HEAT (yellow)	—	START requested, But function is blocked	START is carried out
OUTPUT (green)	In control operation, the light intensity is proportional to the heating current.		
ALARM (red)	Configuration error, AUTOCAL not possible	Controller incorrectly calibrated, carry out AUTOCAL	Error, ↳ chap. 8.19
BUS FAILURE (red)	Incorrect or no configuration of the I/O data	Incorrect or no parameterisation	Communication with PROFIBUS master interrupted
DATA EXCHANGE (green)	—	Communication with PROFIBUS master active, Clear mode	Communication with PROFIBUS master active

The following descriptions contain only device-specific functions. Please consult your PLC description for general information for the PROFIBUS and system configuration.

8.2 PROFIBUS communication

The controller can communicate over the PROFIBUS interface if 24 VDC voltage supply is present.
As long as no network voltage is present, the controller remains in an inactive status.
But interruption of the network voltage (e.g. by being switched off when a door is opened) triggers the error message 201 (error group no. 7, network voltage/sync signal is missing) and the Alarm relay switches. This is caused by the lack of network voltage. The error message can be deleted after the network voltage is switched on again by activating the RS bit (↳ section 8.5.4 "Reset (RS)" on page 28).
The error message or switching of the Alarm relay – caused by switching off the network voltage – can be processed or suppressed in the PLC program without difficulty.

8.3 Device master data file (GSD)

Design tools for the PROFIBUS master to be designed interpret the content of the GSD files of the slaves and generate from them a master parameter set for the PROFIBUS master which performs the user data traffic. The file *ROxy0613.GSD* (*xy*: GSD version; e.g. “30” for version “v3.0”) of the RES-5006 contains all information about the controller necessary for design, e.g. the possible baud rates, parameter descriptions, alarm messages, etc. The GSD files in German (.GSG) and English (.GSD or .GSE) as well as the related image files .DIB for status visualisation can be requested by e-mail (support@ropex.de) or downloaded from our homepage (https://ropex.de).

After the desired GSD file has been integrated into the design tool, one of the three communication modules (“compact”, “expanded” or “complete”) must be selected. This determines the protocol over which the RES-5006 communicates with the PROFIBUS master.

To take advantage of the controller’s complete range of functions, the right GSD version must be used. The GSD version to be used is noted on the controller’s rating plate.

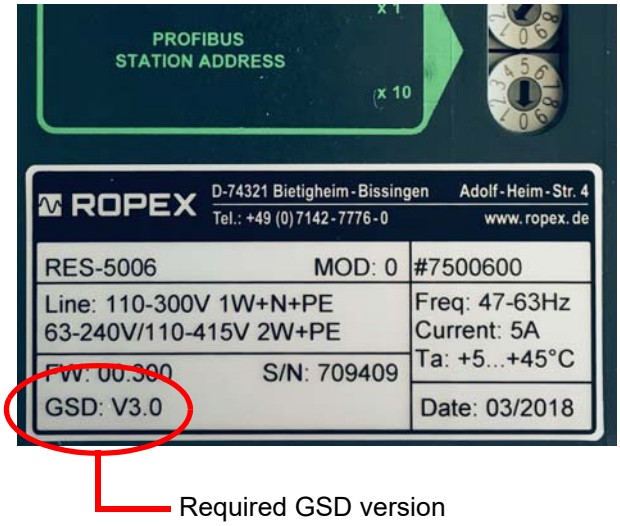

The RES-5006 is completely downward compatible with its predecessor device RES-406 and can therefore also be operated with earlier GSD versions. But not all functions are available then.

8.4 PROFIBUS protocol

The PROFIBUS protocol can be configured as follows:

- “compact” (16 bit for input and 16 bit for output data)
- “expanded” (2x16 bit for input and 2x16 bit for output data)
- “complete” (2x16 bit for input and 4x16 bit for output data)

The protocol is determined during project design by selection of the corresponding module (“compact”, “expanded” or “complete”). The compact protocol enables efficient communication with the RES-5006. In the expanded protocol, the setpoint and actual value of the RES-5006 are separated from the status information and control functions, so simpler decoding in the PROFIBUS master is possible. The complete protocol also provides the start temperature at the time of activation of the ST bit and permits selection of one of the up to eight calibration data sets.

Bits 0…7 are low byte, bits 8…15 high byte (“INTEL format”).

8.4.1 “Compact” protocol with 4-bit error number

The 16 bit **input data** from the PROFIBUS master to the RES-5006 contain the setpoint value and control functions and are structured as follows:

	Control function					Reserve		Setpoint value / AC temperature								
Name:	RS	ST	AC	MP	KS[1]	0	0									
Bit no.:	15	14	13	12	11	10	9	8	7	6	5	4	3	2	1	0

1. As from firmware version 301

The 16 bit **output data** from the RES-5006 to the PROFIBUS master contain the actual value or error number and status information and have the following structure:

													Error no., with AL = 1			
	Status information							Actual value (compact), with AL = 0								
Name:	AA	AG	AL	TE	TO	RA	VZ						A3	A2	A1	A0
Bit no.:	15	14	13	12	11	10	9	8	7	6	5	4	3	2	1	0

8.4.2 “Compact” protocol with 10-bit error number

The 10-bit error numbers must be activated in the parameter data (↳ section 8.7.10 "Error number format" on page 37).

The 16 bit **input data** from the PROFIBUS master to the RES-5006 contain the setpoint value and control functions and are structured as follows:

	Control function					Reserve		Setpoint value / AC temperature								
Name:	RS	ST	AC	MP	KS[1]	0	0									
Bit no.:	15	14	13	12	11	10	9	8	7	6	5	4	3	2	1	0

1. As from firmware version 301

The 16 bit **output data** from the RES-5006 to the PROFIBUS master contain the actual value or error number and status information and have the following structure:

								Error no., with AL = 1								
	Status information							Actual value (compact), with AL = 0								
Name:	AA	AG	AL	TE	TO	RA	VZ/A9	A8	A7	A6	A5	A4	A3	A2	A1	A0
Bit no.:	15	14	13	12	11	10	9	8	7	6	5	4	3	2	1	0

8.4.3 “Expanded” protocol with 4-bit error number

In the expanded protocol, 2x16 bits are transmitted. The 2x16 bit **input data** contain the setpoint value in the word ① and the control functions in the word ②:

①																
	Reserve							Setpoint value / AC temperature								
Name:	0	0	0	0	0	0	0									
Bit no.:	15	14	13	12	11	10	9	8	7	6	5	4	3	2	1	0

②																
	Reserve											Control function				
Name:	0	0	0	0	0	0	0	0	0	0	0	KS[1]	MP	RS	ST	AC
Bit no.:	15	14	13	12	11	10	9	8	7	6	5	4	3	2	1	0

1. As from firmware version 301

The 2x16 bit **output data** contain the setpoint value in the word ① and the error number and status information in the word ②:

①	Actual value (with prefix)															
Name:	VZ															
Bit no.:	15	14	13	12	11	10	9	8	7	6	5	4	3	2	1	0

②	Reserve				Error no.				Reserve		Status information					
Name:	0	0	0	0	A3	A2	A1	A0	0	0	AA	AG	AL	TE	TO	RA
Bit no.:	15	14	13	12	11	10	9	8	7	6	5	4	3	2	1	0

8.4.4 “Expanded” protocol with 10-bit error number

The 10-bit error numbers must be activated in the parameter data (↳ section 8.7.10 "Error number format" on page 37).

In the expanded protocol, 2x16 bits are transmitted. The 2x16 bit **input data** contain the setpoint value in the word ① and the control functions in the word ②:

①	Reserve							Setpoint value / AC temperature								
Name:	0	0	0	0	0	0	0									
Bit no.:	15	14	13	12	11	10	9	8	7	6	5	4	3	2	1	0

②	Reserve					Channel			Reserve		Control function					
Name:	0	0	0	0	0	CH2	CH1	CH0	0	0	KS[1]	MA	MP	RS	ST	AC
Bit no.:	15	14	13	12	11	10	9	8	7	6	5	4	3	2	1	0

1. As from firmware version 301

The 2x16 bit **output data** contain the setpoint value in the word ① and the error number and status information in the word ②:

①	Actual value (with prefix)															
Name:	VZ															
Bit no.:	15	14	13	12	11	10	9	8	7	6	5	4	3	2	1	0

②	Error no.										Status information					
Name:	A9	A8	A7	A6	A5	A4	A3	A2	A1	A0	AA	AG	AL	TE	TO	RA
Bit no.:	15	14	13	12	11	10	9	8	7	6	5	4	3	2	1	0

8.4.5 Protocol “complete” with 4-bit error number

The 2x16 bit **input data** contain the setpoint value in the word ① and the control functions in the word ②:

①	Reserve							Setpoint value / AC temperature								
Name:	0	0	0	0	0	0	0									
Bit no.:	15	14	13	12	11	10	9	8	7	6	5	4	3	2	1	0

②	Reserve					Channel			Reserve			Control function				
Name:	0	0	0	0	0	CH2	CH1	CH0	0	0	0	MA	MP	RS	ST	AC
Bit no.:	15	14	13	12	11	10	9	8	7	6	5	4	3	2	1	0

The 4x16 bit **output data** contain the actual value in the word ①, the status information in the word ②, the error number in the word ③, and the start temperature in the word ④:

①	Actual value (with prefix)															
Name:																
Bit no.:	15	14	13	12	11	10	9	8	7	6	5	4	3	2	1	0

②	Reserve				Channel			Status information								
Name:	0	0	0	MU	CH2	CH1	CH0	SA	IA	WA	AA	AG	AL	TE	TO	RA
Bit no.:	15	14	13	12	11	10	9	8	7	6	5	4	3	2	1	0

③	Error number															
Name:	0	0	0	0	0	0	0	0	0	0	0	0	A3	A2	A1	A0
Bit no.:	15	14	13	12	11	10	9	8	7	6	5	4	3	2	1	0

④	Start temperature (with prefix)															
Name:																
Bit no.:	15	14	13	12	11	10	9	8	7	6	5	4	3	2	1	0

8.4.6 Protocol “complete” with 10-bit error number

The 10-bit error numbers must be activated in the parameter data (↳ section 8.7.10 "Error number format" on page 37).

The 2x16 bit **input data** contain the setpoint value in the word ① and the control functions in the word ②:

①	Reserve							Setpoint value / AC temperature								
Name:	0	0	0	0	0	0	0									
Bit no.:	15	14	13	12	11	10	9	8	7	6	5	4	3	2	1	0

②	Reserve					Channel			Reserve			Control function				
Name:	0	0	0	0	0	CH2	CH1	CH0	0	0	0	MA	MP	RS	ST	AC
Bit no.:	15	14	13	12	11	10	9	8	7	6	5	4	3	2	1	0

The 4x16 bit **output data** contain the actual value in the word ①, the status information in the word ②, the error number in the word ③, and the start temperature in the word ④:

①	Actual value (with prefix)															
Name:																
Bit no.:	15	14	13	12	11	10	9	8	7	6	5	4	3	2	1	0

②	Reserve				Channel			Status information								
Name:	0	0	0	MU	CH2	CH1	CH0	SA	IA	WA	AA	AG	AL	TE	TO	RA
Bit no.:	15	14	13	12	11	10	9	8	7	6	5	4	3	2	1	0

③	Error number															
Name:	0	0	0	0	0	0	A9	A8	A7	A6	A5	A4	A3	A2	A1	A0
Bit no.:	15	14	13	12	11	10	9	8	7	6	5	4	3	2	1	0

④	Start temperature (with prefix)															
Name:																
Bit no.:	15	14	13	12	11	10	9	8	7	6	5	4	3	2	1	0

8.5 Input data

Input data are the data transmitted from the PROFIBUS master to the RES-5006. They contain the setpoint value and control functions, such as START or AUTOCAL for the RES-5006. The functions are explained in the following.

8.5.1 Clear mode

If the PROFIBUS master does not send any data, all bits in the device are set to 0 (inactive). An active sealing procedure will not be interrupted by this.

8.5.2 AUTOCAL autom. zeroing (AC)

Due to automatic zeroing (AUTOCAL), manual zero point setting at the controller is not necessary. With the “AUTOCAL” function, the controller adapts to the current and voltage signals present in the system and adjusts to the value predefined in the parameter data (↳ section 8.7.5 "Variable calibration temperature" on page 36). If no parameter data are transmitted from the PROFIBUS master, the standard value is 20°C.
With some PROFIBUS masters, the parameter data cannot be changed during operation. Adjustment of the calibration data to the current ambient conditions in the machines is therefore not possible.
The calibration temperature – with the appropriate setting in the parameter data (↳ section 8.7.5 "Variable calibration temperature" on page 36) – can therefore be specified at every zeroing through the input data “Setpoint/ AC temperature”. This can be done in the range 0…+40 °C. The specified value for the calibration temperature

must be entered in the input data “Setpoint/AC temperature” during activation of the AUTOCAL function (AC-Bit = 1). This specified value must remain entered until the end of the AUTOCAL function.
If too high of a temperature (greater than 40 °C) or a fluctuating specification value is specified, a corresponding error message is output (error no.115 and 116; ↳ section 8.19 "Error messages" on page 53).
The AUTOCAL request (AC-Bit = 1) is carried out by the controller if the AUTOCAL function is not blocked.
The automatic calibration procedure takes about 10…15 seconds. Additional heating of the heating element does not take place here. During execution of the AUTOCAL function, the related yellow LED lights up on the front panel and the controller reports “AUTOCAL active” (AA-Bit = 1) to the output data. The actual value output (terminal 17+18) goes to 0…3 °C (i.e. approx. 0 VDC).
If the heating element temperature fluctuates, the AUTOCAL function is performed a maximum of 3x. After that, if the function cannot be successfully ended, an error message is output (↳ section 8.19 "Error messages" on page 53).

Perform the AUTOCAL function only when the tool with the heating element has cooled off (basic temperature).

Blocking of the AUTOCAL function:

1. An “AUTOCAL” request is not accepted until 10 seconds after the controller is switched on. During this time, the controller reports “AUTOCAL blocked” (AG bit = 1) in the output data.
2. The “AUTOCAL” function is not executed when the cooling speed of the heating element is more than 0.1 K/s. With an activated AC bit, the function is carried out when the cooling speed has fallen below the specified value.
3. The AUTOCAL function is not executed (LED “HEAT” lights up) in case of an activated START bit (ST bit = 1).
4. The AUTOCAL function is not executed in case of an activated RESET bit (RS bit = 1).
5. Directly after the controller is switched on, the AUTOCAL function cannot be performed if the error numbers 101…103, 201…203, 9xx appear (↳ section 8.19 "Error messages" on page 53). If the controller worked correctly – at least once – after being switched on, the AUTOCAL function is not possible if the error numbers 201…203, 9xx appeared.

If the AUTOCAL function is blocked (AG bit = 1) and there is simultaneously a corresponding request (AC bit = 1), the AUTOCAL LED flashes quickly (4 Hz).

8.5.3 Start (ST)

With activation of the START bit (ST bit = 1), the device-internal target-actual comparison is enabled and the heating element is heated up to the SETPOINT temperature. This continues either until the ST bit is reset or the heating time limit set in the parameter data has been exceeded (↳ section 8.7.6 "Heating time limit" on page 36).
The “HEAT” LED on the front panel of the RES-5006 lights up permanently during this heating time.
A start request is not processed as long as the AUTOCAL function is active, the controller is in the alarm status, the setpoint is not more than 20°C above the calibration temperature, or the RS bit is active. In this case, the “HEAT” LED flashes.
The heating process is ended through resetting of the ST bit, just as with PROFIBUS errors.
The ST bit is only accepted when the AUTOCAL function is not active and no alarm is present.
During a warning message with error no. 104…106, 111…114, 211, 302 or 303, the alarm output is switched on when the ST bit is activated (↳ section 8.19 "Error messages" on page 53). A heating procedure also does not take place here.

8.5.4 Reset (RS)

This bit is used to reset the controller when in the alarm status.
As long as the RS bit is set, no AUTOCAL and no START request are accepted. In the error diagnosis, only errors no. 5 and 7 (201…203, 901, 913) are evaluated and output. In this status, no control of the power element takes place and no measurement impulses are generated. As a result, there is also no more updating of the actual value.

The reset request is not processed until the RS bit is processed. The PROFIBUS communication is not interrupted by resetting of the controller.
During activation of the RS bit, the actual value output goes to 0…3 °C (i.e. about 0 VDC) and the SA bit is active. This can be evaluated as feedback by the higher-level controller (e.g. PLC).
Performance of the AUTOCAL function is not interrupted through activation of the RS bit.
After reset of the RS bit, the controller carries out an internal initialisation for about 500 ms. The next sealing procedure can only be started after that.
A fuse Kb possibly used for switching off the regulation circuit (↳ section 6.3 "Power supply" on page 11) must be securely switched on no later than 200 ms after resetting of the RS bit. The switching and delay times of the fuse must be observed. Switching on later results in an alarm message from the controller.

8.5.5 Measurement pause (MP)

When the MP bit is set, the controller no longer generates any measurement impulses. In the error diagnosis, only errors no. 5 and 7 (201…203, 901, 913) are evaluated and output. Furthermore, the actual value is no longer updated. The last value valid - before setting the MP bit - is output. After deletion of the MP bit, measurement impulses are immediately generated again, all error messages are evaluated, and the actual value is updated.
The MP bit is effective only in measurement mode. ST, RS and AC have priority.
It is suitable for applications in which the electrical connections of the heating element must be disconnected in normal operations without an alarm being triggered (e.g. with sliding rail contacts).
In contrast to the RS bit (RESET), setting the MP bit does not delete any alarm messages. After deletion of the MP bit, the controller is immediately active again; no initialisation phase is run through.
After the controller is switched on, the MP bit is not evaluated by the controller until the system check (incl. function check of the heating circuit) has been successfully completed. This can take several 100 ms.

8.5.6 Master AUTOCAL (MA)

Setting of this control bit starts the calibration process, just as in section 8.5.2 "AUTOCAL autom. zeroing (AC)" on page 27. But in addition, after successful performance of the Master AUTOCAL function, the heating element resistance determined by the controller is stored as a reference value, e.g. after a heating element replacement. This reference value is used in subsequent calibration processes (started with the AC bit) as a basis for calculating the calibration value deviation. This can be used to evaluate ageing of the heating element.
Querying of the calibration value deviation takes place through acyclical read access.

8.5.7 Constant regulation ratio (KS)

This bit is first available as from firmware version 301.

By activating this control bit, a constant power output level is provided. If the KS bit is activated, no temperature control takes place.

Large output values lead to a very rapid temperature rise of the heatsealing band and possibly to overheating. Temperature diagnostics should be activated to detect a temperature overshoot and trigger an error.

The power output level must be specified in the setpoint as a percentage of the maximum power at the time the KS bit is activated. The permissible value range is 0…100%. For larger values, a limitation to 100% takes place. The power setting level must be determined by sealing tests. The machine must operate under real conditions. When determining the output level, it is recommended to start with 10% and to increase the value in small steps.

8.5.8 Channel selection (CH0…CH2)

The RESISTRON® temperature controller has separate memories for up to eight calibration data sets. A calibration data set contains the values that the temperature controller determines during the AUTOCAL function. Saving of the calibration data sets makes it possible to operate sealing tools in alternation without having to perform the AUTOCAL function after each change. AUTOCAL has to be performed only when connecting a new heating element.
As different calibration values, Autocal temperatures and temperature coefficients are available for this in the controller, the desired calibration data set 0…7 can be selected over the 3 bits CH0…CH2. The channel can be switched at any time.
This function can be used, for example, in applications that require frequent change of the format. In such a case, different tools can be replaced for the different formats. A channel that contains the corresponding calibration data set can be assigned to each tool. When all tools have been calibrated with a uniquely assigned channel, the following changes can be performed by just selecting the corresponding channel again.
For applications that do not require a format change, the channel can stay at 0. As a result, the temperature controller acts exactly like older models that do not yet support any different calibration data sets.
While the channel can be switched during performance of the AUTOCAL function, the controller works with the channel chosen at the start of the AUTOCAL function until the AUTOCAL function is completed. The channel currently used by the controller is visible in the status information.

8.5.9 Setpoint

Depending on the selected temperature range (↳ section 8.7.1 "Temperature range and alloy" on page 35), the setpoint can be specified up to 300°C or up to 500°C. With larger setpoints, there is an internal limitation to 300°C or 500°C.

8.6 Output data

These are the data transmitted from the RES-5006 to the PROFIBUS master. They contain the current actual value and all important information about the current status of the controller. In case of alarm, an exact error diagnosis can be performed using the error number.

8.6.1 Autocal active (AA)

The AA bit shows that the AUTOCAL function is currently being executed.

8.6.2 Autocal blocked (AG)

If the AG bit is set, the AUTOCAL function is currently blocked. That is the case when START is active or the heating element is still in the cooling off phase.

8.6.3 Alarm active (AL)

If the AL bit is set, an alarm was triggered and not reset yet. The error number provides information about the exact cause of the error (↳ section 8.19 "Error messages" on page 53).

8.6.4 Warning active (WA)

This bit can be set in addition to the AL bit. If the WA bit is set, a warning is output to indicate the current fault. In this case, the alarm relay is not active.

8.6.5 Temperature reached (TE)

The TE bit is set when the actual temperature has reached 95% of the setpoint temperature. As soon as the control mode is ended (ST bit = 0) or an alarm occurs (AL bit = 1), this status bit is reset.

8.6.6 Temperature OK (TO)

The RES-5006 checks whether the actual temperature lies within a settable “good window” tolerance band around the setpoint temperature. The lower ($\Delta\vartheta_{low}$) and upper ($\Delta\vartheta_{high}$) tolerance band limit can be changed separately through the parameter data (↳ section 8.7 "Parameter data" on page 33). The following settings are possible:

1. **“Off”**
   The TO bit is always reset.
2. **“Active when Tact = Tset” (factory setting)**
   The TO bit is set when the actual temperature is within the set temperature monitoring band. If the actual temperature is outside the monitoring band, the TO bit is reset (see following graphic).

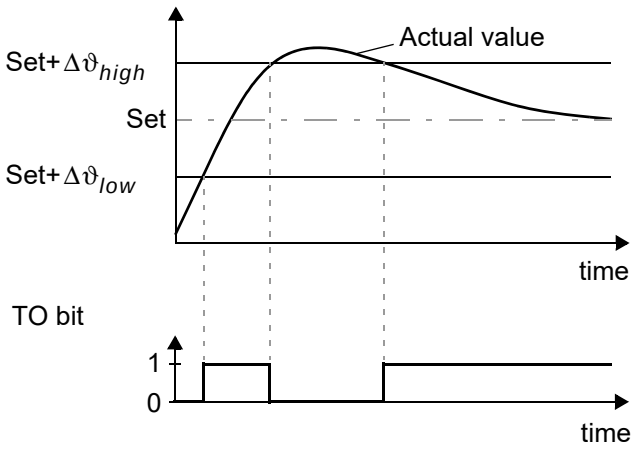

   The actual temperature is hereby evaluated independently of the control mode, in contrast to the “Temperature reached” (TE bit) status bit.
3. **“Active when Tact = Tset”, with latch function**
   A sealing cycle begins with setting of the ST bit. The TO bit is set if the actual temperature reaches the temperature monitoring band for the first time within a sealing cycle. If the monitoring band is left again - while the ST bit is still set - the TO bit is reset (see Image a.). If the actual temperature no longer leaves the monitoring band - while the ST bit is still set - the TO bit is not reset until the start of the next sealing cycle (latch function, see Image b.). The switching status of the TO bit can thus be queried after resetting of the ST bit and before the start of the next sealing cycle.

a.) Temperature *not* ok

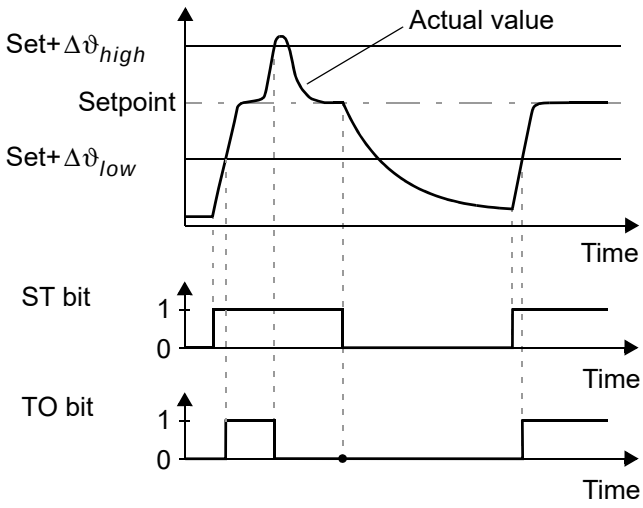

b.) Temperature ok

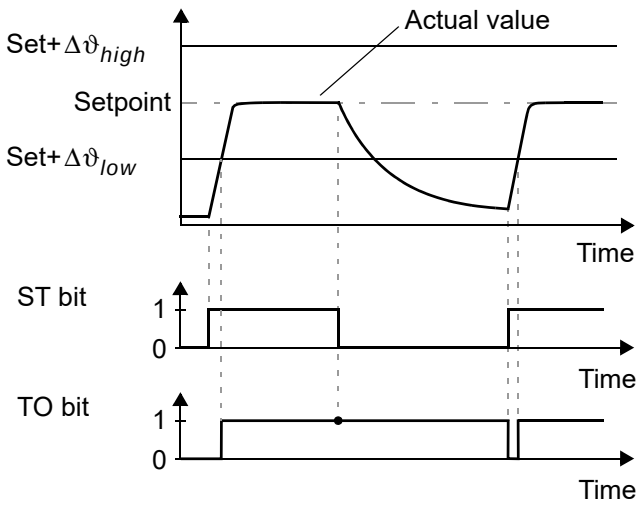

The TO bit can only be set over the parameter data in the PROFIBUS master (also over DPV1). Setting over the ROPEX visualisation software is not possible.
The tolerance limits can be set up to max. ±99 K.

8.6.7 Regulation active (RA)

The RES-5006 has successfully accepted the START request and is in the control mode when RA bit = 1.

8.6.8 Prefix (VZ)

The prefix bit displays in the compact protocol whether the actual value is positive or negative.

8.6.9 Information active (IA)

This bit is intended for later use and is currently not supported (always 0).

8.6.10 Standby active (SA)

This bit is active when the RS bit is set. With it, the controller can detect when the controller has accepted the RS bit or the MP bit and the RS bit or MP bit will then be deleted again (“handshake” procedure).

8.6.11 Measurement interruption (MU)

This bit is active as long as the controller does not perform a temperature measurement during the regulation phase (ST = 1). This can occur when the actual value is larger than the setpoint value (setpoint exceeded). This can be used, for example, to evaluate whether measurement interruptions occur during the heating impulse. This would then be an indication of excessive temperature, which can result in a bad sealing seam.
As soon as a measurement is performed again, the MU bit goes back to 0.
The maximum duration of the measurement interruption can be parameterized on the RES-5006 (↳ section 8.7.16 "Maximum measurement pause" on page 41).

8.6.12 Actual value

When the *compact* protocol is used, the actual value always represents a positive number. The prefix bit (VZ) then displays whether the actual value is positive or negative. In case of alarm, the actual value contains the error number.
In the *expanded* and *complete* protocols, the entire 16 bits of the first word are evaluated as a prefixed number (two’s complement depiction). In case of an alarm or during calibration, the actual value is 0. The error number is on separate bits.

8.6.13 Start temperature

If the optional “Temperatures” submodule should be projected, the controller supplies an additional 16 bit output word with the last start temperature. This is the temperature measured directly before execution of the start command (ST bit = 1). This measurement value can be used to evaluate the cooling. The value is valid only during the heating phase (ST bit = 1). Outside of this phase, the value “-99 °C” is output, with which it can be differentiated whether or not the value is valid. The value range lies between -20 °C and 500 °C.

8.6.14 Error numbers

If an alarm is present (AL bit = 1), the error number allows determination of the exact cause of the error. The parameter “Error number format” determines whether two- or three-digit error numbers are output. With the two-digit error numbers, some alarms are combined into groups, while the cause of the error can be determined more precisely with three-digit error numbers.
The error number is displayed in the compact protocol in place of the actual value in bit 0…3 (error number format = 4 bit) or in bit 0…9 (error number format = 10 bit).

In the expanded and complete protocols, the error number appears in the second word at bit position 8…11 (error number format = 4 bit), or at bit position 6…15 (error number format = 10 bit) (↳ section 8.19 "Error messages" on page 53).
Besides the error numbers, the PROFIBUS diagnosis is also used to transmit error messages to the PROFIBUS master. The error messages for the corresponding error numbers are already stored in the GSD file and so automatically appear in plain text in the PROFIBUS master when the device diagnosis of the RES-5006 is queried. The language in which the error messages appear depends on the selected GSD file.

10-bit error numbers are always transmitted over the PROFIBUS diagnosis independently of the setting of the "Error number format" parameter (↳ section 8.7.10 "Error number format" on page 37).

8.7 Parameter data

The parameter data contain values for selection of the heating element alloy, the temperature range, the lower and upper tolerance band limit for temperature monitoring, the calibration temperature, the measurement impulse duration (only for special applications), as well as the optional heating time limit. They are transmitted at every system start from the PROFIBUS master to the RES-5006. In addition, the parameters can be sent through acyclical write/read services at any time from the PROFIBUS master to the controller or queried by the controller. The DPV1 protocol extensions are required for this. Saving in the RES-5006 does not take place. The parameter data have the following structure:

Index 46 to index 48 are first available as from firmware version 301.

No.	Function	Standard value[1]	Possible values
0…3	Reserved	-	-
4	Temperature range / alloy	10	0, 1, 4, 5, 8, 9, 10, 11
5	Lower threshold for temperature OK	10 K	3…99 K
6	Upper threshold for temperature OK	10 K	3…99 K
7	Calibration temperature	20 °C	-1, 0…40 °C
8	Heating time limit (100 ms units)	0	0…250 (0…25.0 s)
9	Expanded device diagnosis	Activated	Deactivated, Activated
10	Measurement impulse duration	17	17…30 (1.7…3.0 ms)
11	Data format	High/low byte (Intel)	High/low byte (Intel), Low/high byte (Motorola)
12	Error number format	10 bit	4 bit, 10 bit
13/14	Temperature coefficient	1100 ppm/K	400…4000 ppm/K
15	Temperature range	300°C	200, 300, 400, 500°C
16/17	Maximum temperature	300°C	200…500°C
18	Temperature diagnosis	Deactivated	Deactivated, activated

No.	Function	Standard value[1]	Possible values
19	Temperature diagnosis delay (100 ms units)	0 s	0…99 (0…9.9 s)
20/21	Heat-up time monitoring	0 s	0…999 (0…99.9 s)
22	AUTOCOMP	Off	Off, On, AUTO
23	Temperature OK bit	Active when ACTUAL=SET-POINT	Off, Active when ACTUAL=SETPOINT Active when ACTUAL=SETPOINT with latch
24	Hold mode	Off	Off, On, 2 sec.
25	Calibration temperature, channel 1	20 °C	-1, 0…40 °C
26/27	Temperature coefficient, channel 1	1100 ppm/K	400…4000 ppm/K
28	Calibration temperature, channel 2	20 °C	-1, 0…40 °C
29/30	Temperature coefficient, channel 2	1100 ppm/K	400…4000 ppm/K
31	Calibration temperature, channel 3	20 °C	-1, 0…40 °C
32/33	Temperature coefficient, channel 3	1100 ppm/K	400…4000 ppm/K
34	Calibration temperature, channel 4	20 °C	-1, 0…40 °C
35/36	Temperature coefficient, channel 4	1100 ppm/K	400…4000 ppm/K
37	Calibration temperature, channel 5	20 °C	-1, 0…40 °C
38/39	Temperature coefficient, channel 5	1100 ppm/K	400…4000 ppm/K
40	Calibration temperature, channel 6	20 °C	-1, 0…40 °C
41/42	Temperature coefficient, channel 6	1100 ppm/K	400…4000 ppm/K
43	Calibration temperature, channel 7	20 °C	-1, 0…40 °C
44/45	Temperature coefficient, channel 7	1100 ppm/K	400…4000 ppm/K
46/47	Startup delay after Reset[2] (100 ms units)	0.2 s	0…999 (0…9.99 s)
48	Maximum measurement pause [periods][2]	10	0...10

1. The standard value is stored in the GSD file and is transmitted at system start from the PROFIBUS master to the RES-5006.
2. As from firmware version 301

8.7.1 Temperature range and alloy

With this parameter, both the temperature range and the heating element alloy can be selected. By changing the standard value (10), the setting of the rotary coding switch (section 7.2.2 "Configuration of the rotary coding switch for temperature range and alloy" on page 17) can be overwritten.

Value	Temperature range	Alloy
0	300°C	TCR = 1100 ppm/K, e.g. Alloy A20
1	300°C	TCR = 780 ppm/K, e.g. Alloy L
4	500°C	TCR = 1100 ppm/K, e.g. Alloy A20
5	500°C	TCR = 780 ppm/K, e.g. Alloy L
8	300°C	TCR = 3500 ppm/K e. g. LEX3500
9	Setting over PC visualisation	Setting over PC visualisation
10	Setting of the rotary coding switch	Setting of the rotary coding switch
11	Variable: Parameter 15 is used	Variable: Parameter 13/14 as well as the channel-specific temperature coefficients 26/27, 29/30, 32/33, 35/36, 38/39, 41/42, 44/45 are used

After a change of this parameter, the AUTOCAL function must be performed.

8.7.2 TCR Calculator

This functionality is first available as from firmware version 301.

The TCR-Calculator can be used to determine the temperature coefficient (TCR) of the heatsealing band used. The real temperature coefficient of the heatsealing band often differs from the standard value. The material composition and processing influence the properties of the heatsealing band. This leads to the fact that the temperature display of the controller differs from the real temperature of the heatsealing band. The usage of the TCR-Calculator allows an easy correction of the TCR value and thus a better matching of the temperature display of the controller and the real temperature of the heatsealing band.
To calculate the TCR value, the temperature at the heatsealing band is measured in control mode (ST bit = 1) using an external temperature sensor (e.g. a thermocouple). The measured temperature is transferred to the temperature controller in slot 1, index 190/191. The calculated temperature coefficient can be read out from slot 1, index 192/193. The temperature coefficient is only calculated in control mode (ST bit = 1). Reading back the calculated TCR value must be done during active control operation, i.e. during an active heating impulse, as the internal measured value of the current heatsealing band temperature is used for the calculation.
Errors in the calculation of the temperature coefficient are reported with the value 0 (calculated temperature coefficient too low or no active control operation) or 65535 (calculated temperature coefficient too high).
To use the calculated TCR value, it must be set for the corresponding channel as temperature coefficient in parameter index 13/14, 26/27, 29/30, 32/33, 35/36, 38/39, 41/42 or 44/45 (temperature coefficient). In addition, the value 11 (variable) must be used in parameter index 1 (alloy / temperature range).

8.7.3 Lower threshold for temperature OK

Lower threshold value for the “good window”.
See section 8.6.6 "Temperature OK (TO)" on page 31 and section 8.7.12 "Temperature diagnosis" on page 38.

8.7.4 Upper threshold for temperature OK

Upper threshold value for the “good window”.
See section 8.6.6 "Temperature OK (TO)" on page 31 and section 8.7.12 "Temperature diagnosis" on page 38.

8.7.5 Variable calibration temperature

The calibration temperature is set as standard to 20 °C. It can be changed between 0 °C and 40 °C and thus adapted to the temperature of the cooled-off heating element.
With some PROFIBUS masters, the parameter data cannot be changed during operation. Adjustment of the calibration data to the current ambient conditions in the machines is therefore not possible.
The calibration temperature can therefore be released for setting through the input data by specifying the value “-1” in the parameter data. Specification of the calibration temperature is then made through the input data “Setpoint/AC temperature” (↳ section 8.5.2 "AUTOCAL autom. zeroing (AC)" on page 27).
After a change of the calibration temperature, the AUTOCAL function must be performed.

8.7.6 Heating time limit

With the heating time limit, additional monitoring can be done before unintended permanent heating. The controller automatically switches off the heating impulse after the set heating time limit has passed when the ST bit should remain set longer than the time set through the heating time limit. The ST bit must be reset before the controller is started again.
The heating time limit is switched off as standard (value 0) and can be selected between 0 s and 25.0 s (0 and 250).

8.7.7 Expanded device diagnosis

The expanded device diagnosis uses the diagnosis channel of the PROFIBUS protocol to report possible error statuses of the RES-5006 to the PROFIBUS master. Text messages for every error status are stored in the GSD file. The PROFIBUS master can automatically displayed them in case of a corresponding display possibility.
With the help of parameter no. 9, the expanded device diagnosis can be switched on or off. The expanded device diagnosis is active in the standard setting.
Regardless of this parameter, the possibility remains of querying the device status over the user data.
DPV1 protocol expansion (alarm model):
Expanded device diagnosis is not available if the DPV1 protocol expansion (↳ section 8.8 "DPV1 protocol expansions" on page 42) is used. The related DPV1 alarm model (↳ section 8.8.2 "DPV1 alarm model" on page 42) must then be used. With parameter no. 9 of the GSD file, in this case the so-called DPV1 diagnosis alarm is switched on or off.
If the previous expanded device diagnosis should continue to be used (e.g. for reasons of software compatibility), a GSD version lower than v2.0 must be used. This automatically switches off the DPV1 function for the RES-5006 in the PROFIBUS master.

8.7.8 Measurement impulse duration

The length of the measurement impulses generated by the controller can be set with parameter no. 10. For certain applications, it can be necessary to lengthen the measurement impulse beyond the standard 1.7 ms.

8.7.9 Data format

The format of the cyclically replaced process data (↳ section 8.4 "PROFIBUS protocol" on page 23) can be changed. Depending on the type of PROFIBUS master used, it may be necessary to switch the high byte (bits 15…8) and low byte (bits 7…0) against each other.

For Siemens controllers, the setting “Low/high byte (Motorola)” is recommended.

8.7.10 Error number format

The length of the error number in the cyclical data is set with this parameter. Selection is possible between 4-bit and 10-bit (↳ section 8.4 "PROFIBUS protocol" on page 23). The “4-bit” setting generates 2-digit error numbers in the range 1…13. The “10-bit” setting generates more detailed 3-digit error numbers (↳ section 8.19 "Error messages" on page 53)

8.7.11 Automatic phase correction (AUTOCOMP)

In special sealing applications, it may be necessary to compensate the phase displacement between the U_R and I_R measurement signals (↳ ROPEX application report). Use of the AUTOCOMP function can be necessary here. The AUTOCOMP function must be released for use in the parameter data (↳ section 8.7 "Parameter data" on page 33) or through the DPV1 protocol expansion (↳ section 8.8 "DPV1 protocol expansions" on page 42) (standard setting: AUTOCOMP off).
The following settings are possible:

1. **“Off”** (factory setting)
   AUTOCOMP function switched off.
2. **“On”**
   The AUTOCOMP function is carried out when the AUTOCAL function (↳ section 8.5.2 "AUTOCAL autom. zeroing (AC)" on page 27) has been called up quickly twice in sequence. The pause between the end of the first and start of the second execution of AUTOCAL must be less than 2.0 seconds. The second execution of AUTOCAL lasts only about 2.0 seconds and contains the AUTOCOMP function.
   If the pause between the two executions is longer than 2.0 seconds, the normal AUTOCAL function is carried out the second time.

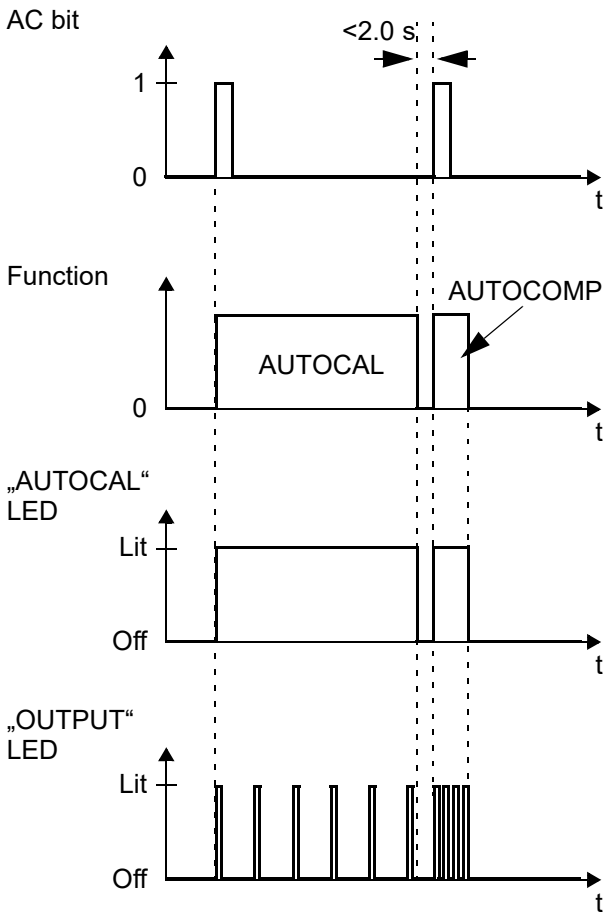

During execution of the AUTOCOMP function, the “OUTPUT” LED flashes several times and the actual value output (terminal 17+18) goes to 0…3 °C (i.e. approx. 0 VDC).

3. **“AUTO”**
   With this setting, the AUTOCOMP function is automatically started after a successful execution of the AUTOCAL function.

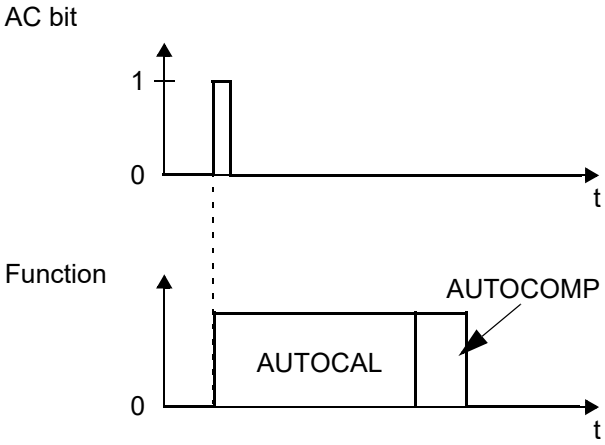

During execution of the AUTOCOMP function, the “OUTPUT” LED flashes several times and the actual value output (terminal 17+18) goes to 0…3 °C (i.e. approx. 0 VDC).

8.7.12 Temperature diagnosis

An additional temperature diagnosis can be activated in the parameter data (GSD file) or through the DPV1 protocol expansion. Here, the RES-5006 checks whether the ACTUAL temperature lies within a settable “good window” tolerance band around the SETPOINT temperature. The lower ($\Delta\vartheta_{low}$) and upper ($\Delta\vartheta_{high}$) tolerance band limits are the same as with the “Temperature OK” monitoring (TO-bit, ↳ section 8.6.6 "Temperature OK (TO)" on page 31). The limits are set at the factory to -10 K and +10 K, respectively.
After activation of the START signal, if the ACTUAL temperature lies within the specified tolerance band, the temperature diagnosis is switched on. If the ACTUAL temperature leaves the tolerance band, the related error no. 307, 308 is output and the alarm output switches on (↳ section 8.19 "Error messages" on page 53).

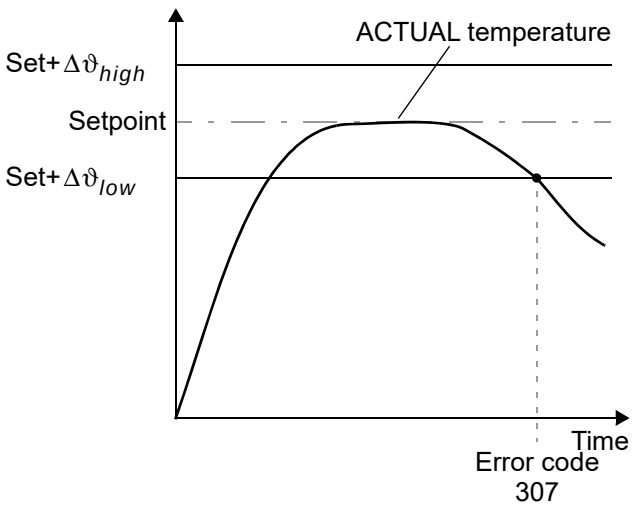

If the temperature diagnosis has not switched on before the START signal is deactivated (i.e. The ACTUAL temperature has not exceeded the lower tolerance band limit or dropped below the upper tolerance band limit), the related error no. 309, 310 is output and the alarm relay switches on.
Additionally, a delay time (0…9.9 s) can be set in the parameter data (GSD file) or through the DPV1 protocol expansion. After the lower tolerance band limit is exceeded, the temperature diagnosis is switched on only after the parameterised delay time has expired. As a result, the temperature diagnosis can be intentionally suppressed, such as during a temperature drop caused by closing the tool.
The lower and upper tolerance band limits cannot be set through the ROPEX visualisation software. These are the same limits as with the TO bit. These can only be set through the parameter data (↳ section 8.7 "Parameter data" on page 33) or the DPV1 protocol expansion (↳ section 8.8 "DPV1 protocol expansions" on page 42).

8.7.13 Heat-up time monitoring

An additional heat-up time monitoring can be activated in the parameter data (GSD file) or through the DPV1 protocol expansion.
This monitoring is activated when the ST bit is activated. The RES-5006 then monitors the time until the ACTUAL temperature has reached 95% of the setpoint temperature. If this takes longer than the parameterised time, error no. 304 is output and the alarm output switches on (↳ section 8.19 "Error messages" on page 53).

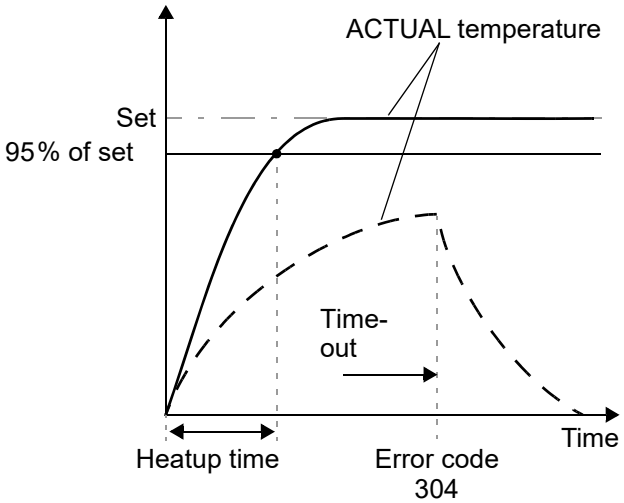

The “Heat-up time monitoring” function must be released for use in the parameter data (↳ section 8.7 "Parameter data" on page 33) or through the DPV1 protocol expansion (↳ section 8.8 "DPV1 protocol expansions" on page 42) (standard setting: Heating time monitoring off).

8.7.14 Hold mode

Output of the ACTUAL temperature via the PROFIBUS protocol can be parameterised as follows through the parameter data (GSD file) or the DPV1 protocol expansion:

1. **“Off” (factory setting)**
   The current ACTUAL temperature is always output in real time.
2. **“On”**
   The same ACTUAL temperature that was current at the end of the last sealing phase is output. After the controller is switched on, the real ACTUAL temperature is displayed until the end of the first heating phase.
3. **“2 Sec.”**
   This causes the current ACTUAL temperature to be output over the PROFIBUS protocol for an additional 2 seconds at the end of a sealing phase. Then the ACTUAL temperature is output in real time – until the end of the next sealing phase.

The Hold mode only affects output of the ACTUAL temperature over the PROFIBUS protocol and the numeric temperature display in the ROPEX visualisation software. Output of the ACTUAL temperature over the analogue output of the controller or the graphic drawing in the ROPEX visualisation software is not changed by this.
The different Hold modes are depicted in the following image:

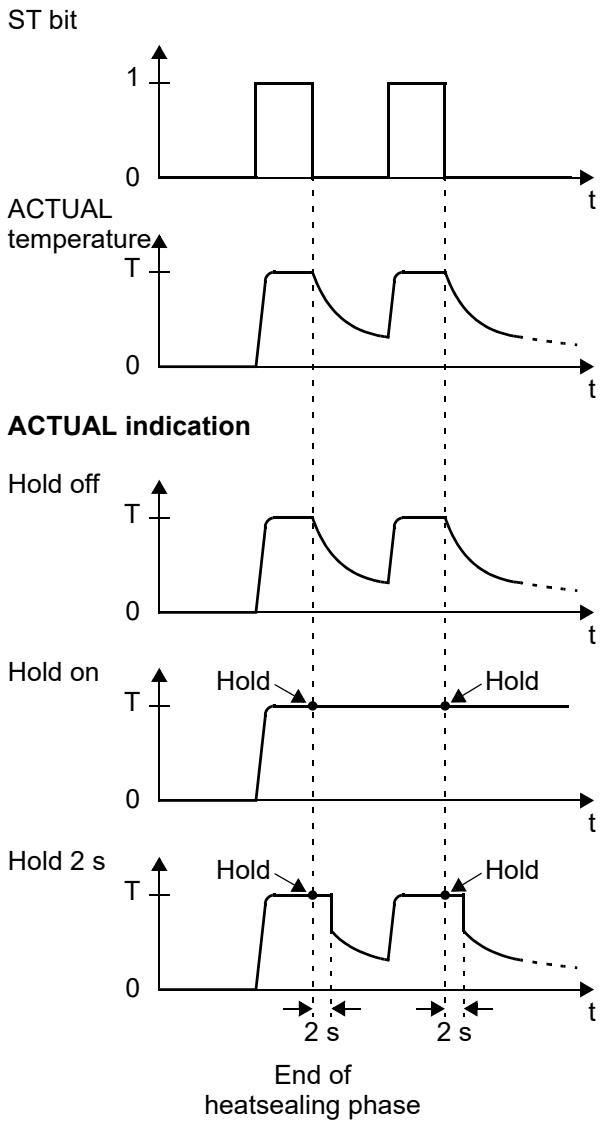

The settings for the Hold mode must be made in the parameter data (↳ section 8.7 "Parameter data" on page 33) or through the DPV1 protocol expansion (↳ section 8.8 "DPV1 protocol expansions" on page 42) (Standard setting: Hold mode off).

8.7.15 Restart delay after Reset

This element is first available as from firmware version 301.

After acknowledging an alarm with the reset signal (RS bit), the RESISTRON® temperature controller waits until any contactor connected has closed the heating circuit again. Only after this waiting time has elapsed measuring pulses are generated again in order to determine the current ACTUAL temperature and to carry out error diagnostics. This restart delay is 0.2 s by default and can be adjusted with the parameter index 46/47. This allows slower switching contactors to be used.

8.7.16 Maximum measurement pause

This element is first available as from firmware version 301.

If the RESISTRON® temperature controller determines in control mode (ST bit = 1), that the current ACTUAL temperature is greater than the setpoint, the power supply to the heatsealing band is reduced. If the power reduction is not sufficient, the low-power measuring pulses, which determine the current ACTUAL temperature, are paused. This measurement pause can last up to 10 periods in the default setting. During this measurement pause, the controller cannot react to a change in the ACTUAL temperature. The status bit „measurement interruption active“ (↳ section 8.6.11 "Measurement interruption (MU)" on page 32) is active (MU bit = 1) at this time.
In certain applications it may be useful to shorten this maximum measurement pause, e.g. if the higher ACTUAL temperature values are caused by measurement errors. For this case the maximum measuring pause can be shortened with the parameter index 48.

A measuring pause that is set too small can lead to an increased temperature if the system is incorrectly dimensioned (secondary voltage of the impulse transformer is too large) or if the sealing temperatures are low.

8.8 DPV1 protocol expansions

8.8.1 Identification and maintenance (I&M functions)

The I&M functions (identification & maintenance) are helpful for identification and cataloguing of PROFIBUS devices. The RES-5006 supports the I&M functions 0, 1, 2, 3 and 4. Access to the I&M functions is through slot 0 and is specified in IEC 61158-6-3.
The I&M0 area contains only readable information about the device: Manufacturer recognition, order number, serial number, and hardware and software revisions.
In the I&M1 area are two text fields for function (32 bytes) and installation location (22 bytes). These can be read out and described as desired.
The installation date (16 bytes) of the device can be stored in the I&M2 area.
The I&M3 area provides a text field for entering any desired comment (54 bytes).
The I&M4 area contains a signature (54 bytes) that likewise can be written as desired and read out again. This signature has no functional meaning for the RES-5006.

8.8.2 DPV1 alarm model

In the DPV1 mode, the RES-5006 sends alarm messages of the type diagnosis alarm. This requires that the parameter “expanded device diagnosis” be set to “activated” or “activated for SFM[1]”.
The grey-coloured data correspond to the standard diagnosis, the black data depict the expanded diagnosis data.

DPV0 mode

Expanded device diagnosis active:
Coming: 08 0C 00 00 06 13 06 81 00 D1 67 00
Going: 00 0C 00 00 06 13 06 81 00 DA 00 00
Expanded device diagnosis SFM:
Coming: 08 0C 00 00 06 13 06 81 00 C1 67 00 06 81 00 00 67 00
Going: 00 0C 00 00 06 13 06 81 00 CA 00 00 06 81 00 00 00 00

DPV1 mode

Expanded device diagnosis active:
Coming: 08 0C 00 00 06 13 06 01 00 A1 67 00
Going: 00 0C 00 00 06 13 06 01 00 AA 00 00
Expanded device diagnosis SFM:
Coming: 08 0C 00 00 06 13 06 81 00 00 67 00 06 01 00 B1 67 00
Going: 00 0C 00 00 06 13 06 01 00 BA 00 00
In the DPV1 mode, the alarms from the PROFIBUS master must be acknowledged. The RES-5006 supports alarm acknowledgement over both the SAP51 and the SAP50. The advantage is that an alarm acknowledgement over the additional SAP50 can also be made at the same time that an active acyclical read access is taking place over SAP51.

8.8.3 DPV1 parameter data

The fundamental settings and functions of the controller must be set over the parameter data in the GSD file (↳ section 8.7 "Parameter data" on page 33).
For some PLC systems, the settings in the GSD file can only be changed during project creation. A change during operation of the machine/system is not possible.

1. SFM: Report system error

With the DPV1 protocol expansion, there is the possibility to change these settings and functions during operation of the controller. As a result, the temperature coefficient for the heating band can be adjusted through the PLC controller during the validation process, for example.
The parameters of the controller can be both read and written over this acyclical service. Access to the parameter data is made directly over slot index addressing. As the controller does not store the parameters transmitted to it, after a restart of the controller or bus, it must be ensured that the parameters which were changed from the static configuration are retransmitted again.

Clarify with the manufacturer how the used PLC system supports the DPV1 protocol expansion.

DPV1 parameter table of the RES-5006
Standard values are printed in ***bold/italics***

Slot	Index	Parameter	Range of values
0	255	I&M functions	Article number, serial number, version numbers, manufacturer ID
0	0	Cyclical data	section 8.4 "PROFIBUS protocol" on page 23
1	4	Alloy/area	0: 1100 ppm/K, 300°C 1: 780 ppm/K, 300°C 4: 1100 ppm/K, 500°C 5: 780 ppm/K, 500°C 8: 3500 ppm/K, 300°C 9: PC configuration ***10: Rotary encoder switch*** 11: variable
1	5	Lower temperature threshold [K]	3…99 ***(10)***
1	6	Upper temperature threshold [K]	3…99 ***(10)***
1	7	Calibration temperature [°C], channel 0	-1: variable over cyclical data 0…40 ***(20)***
1	8	Heating time limit [0.1 s]	0…250 ***(0=No limit)***
1	9	Device diagnosis	0: Deactivated ***1: Activated***
1	10	Measurement impulse duration [0.1 ms]	17…30 ***(17)***
1	11	Data format	***0: Intel*** 1: Motorola
1	12	Error number format	0: 4 bit (2 digit) ***1: 10 bit (4 digit)***
1	13/14	Temperature coefficient [ppm/K], channel 0	400…4000 ***(1100)***
1	15	Temperature range	0: 200°C ***1: 300°C*** 2: 400°C 3: 500°C
1	16/17	Maximum temperature [°C]	200…500 ***(300)***
1	18	Temperature diagnosis	***0: Deactivated*** 1: Activated
1	19	Diagnosis delay [0.1 s]	0…99 ***(0)***
1	20/21	Heating time monitoring [0.1 s]	0…999 ***(0)***
1	22	AUTOCOMP	***0: off*** 1: on 2: AUTO

Slot	Index	Parameter	Range of values
1	23	Output 1 (temp-OK bit)	0: off ***1: Active when Actual=Setpoint*** 2: Active when Actual=Setpoint, with latch
1	24	Hold mode	***0: off*** 1: on 2: 2 sec.
1	25	Calibration temperature, channel 1	-1, 0…40 °C ***(20)***
1	26/27	Temperature coefficient, channel 1	400…4000 ppm/K ***(1100)***
1	28	Calibration temperature, channel 2	-1, 0…40 °C ***(20)***
1	29/30	Temperature coefficient, channel 2	400…4000 ppm/K ***(1100)***
1	31	Calibration temperature, channel 3	-1, 0…40 °C ***(20)***
1	32/33	Temperature coefficient, channel 3	400…4000 ppm/K ***(1100)***
1	34	Calibration temperature, channel 4	-1, 0…40 °C ***(20)***
1	35/36	Temperature coefficient, channel 4	400…4000 ppm/K ***(1100)***
1	37	Calibration temperature, channel 5	-1, 0…40 °C ***(20)***
1	38/39	Temperature coefficient, channel 5	400…4000 ppm/K ***(1100)***
1	40	Calibration temperature, channel 6	-1, 0…40 °C ***(20)***
1	41/42	Temperature coefficient, channel 6	400…4000 ppm/K ***(1100)***
1	43	Calibration temperature, channel 7	-1, 0…40 °C ***(20)***
1	44/45	Temperature coefficient, channel 7	400…4000 ppm/K ***(1100)***
1	46/47	Startup delay after Reset [0.01 s]	0…999 s ***(200)***
1	48	Maximum measurement pause [periods]	0…10 ***(10)***

Slot 1, index 46 to index 48 are first available as from firmware version 301.

The date, time, operating hours counter and counter for the individual calibration channels can be read out in slot 1, starting with index 100. The counters can also be changed with write access, with the exception of the operating hours counter (index 107…110) and the not-resettable total cycle counter (index 111…114).
When writing the date or time, a plausibility check that takes leap years into account is performed. If the transferred values do not contain valid date or time information, the RES-5006 answers with an access error 0xb7 “invalid range”. To avoid inconsistencies, individual values for the date or time should be changed together with write access, that is, index 100…103 or 104…106.

Slot	Index	Parameter	Range of values
1	100/101	Time: Milliseconds (only whole seconds)[1]	0…59000
1	102	Time: Minutes	0…59

Slot	Index	Parameter	Range of values
1	103	Time: Hours	0…23
1	104	Date: Days (day of the week not supported in the upper 3 bits)	1…31
1	105	Date: Month	1…12
1	106	Date: Year	0…99
1	107…110	Operating hours [0.1 h]	0…999999999 (0…99999999.9 h)
1	111…114	Not-resettable total cycles counter	0…999999999
1	115…118	Resettable total cycles counter	0…999999999
1	119…122	Cycle counter, channel 0	0…999999999
1	123…126	Cycle counter, channel 1	0…999999999
1	127…130	Cycle counter, channel 2	0…999999999
1	131…134	Cycle counter, channel 3	0…999999999
1	135…138	Cycle counter, channel 4	0…999999999
1	139…142	Cycle counter, channel 5	0…999999999
1	143…146	Cycle counter, channel 6	0…999999999
1	147…150	Cycle counter, channel 7	0…999999999

1. Milliseconds are not supported by the internal real time clock; read access always delivers whole multiples of 1000. When writing, parts of 1000 are ignored.

Slot 1, index 180 contains the start temperature (↳ section 8.6.13 "Start temperature" on page 32) and index 182 the internal device temperature. These values can only be read and not written.

Slot	Index	Parameter	Range of values
1	180/181	Start temperature	-99…500 °C
1	182/183	Device temperature	-60…190 °C

Slot 1, index 190 contains the elements required for the TCR Calculator (↳ section 8.7.2 "TCR Calculator" on page 35). The external measured temperature is writeable, the calculated temperature coefficient is read-only.

Slot 1, index 190 to index 193 are first available as from firmware version 301.

Slot	Index	Parameter	Range
1	190/191	External measured temperature	40…600 °C ***(40)***
1	192/193	Calculated temperature coefficient	400…4000 ppm/K ***(0)*** 0 (error), 65535 (error)

In slot 1, starting with index 200, the channel-specific calibration data deviations are available (↳ section 8.5.6 "Master AUTOCAL (MA)" on page 29). These values can only be read but not written.

Slot	Index	Parameter	Range of values
1	200/201	Calibration data deviation [0.01%], channel 0	-10000…10000 ***(0)*** (-100.00…100.00%)
1	202/203	Calibration data deviation [0.01%], channel 1	-10000…10000 ***(0)*** (-100.00…100.00%)
1	204/205	Calibration data deviation [0.01%], channel 2	-10000…10000 ***(0)*** (-100.00…100.00%)
1	206/207	Calibration data deviation [0.01%], channel 3	-10000…10000 ***(0)*** (-100.00…100.00%)
1	208/209	Calibration data deviation [0.01%], channel 4	-10000…10000 ***(0)*** (-100.00…100.00%)
1	210/211	Calibration data deviation [0.01%], channel 5	-10000…10000 ***(0)*** (-100.00…100.00%)
1	212/213	Calibration data deviation [0.01%], channel 6	-10000…10000 ***(0)*** (-100.00…100.00%)
1	214/215	Calibration data deviation [0.01%], channel 7	-10000…10000 ***(0)*** (-100.00…100.00%)
1	216	Conductor through current transformer	1…9 ***(1)***
1	217/218	Calibration resistance [0.1 mΩ], channel 0	0…65535 ***(0)*** (0…6553.5 mΩ)
1	219/220	Calibration resistance [0.1 mΩ], channel 1	0…65535 ***(0)*** (0…6553.5 mΩ)
1	221/222	Calibration resistance [0.1 mΩ], channel 2	0…65535 ***(0)*** (0…6553.5 mΩ)
1	223/224	Calibration resistance [0.1 mΩ], channel 3	0…65535 ***(0)*** (0…6553.5 mΩ)
1	225/226	Calibration resistance [0.1 mΩ], channel 4	0…65535 ***(0)*** (0…6553.5 mΩ)
1	227/228	Calibration resistance [0.1 mΩ], channel 5	0…65535 ***(0)*** (0…6553.5 mΩ)
1	229/230	Calibration resistance [0.1 mΩ], channel 6	0…65535 ***(0)*** (0…6553.5 mΩ)
1	231/232	Calibration resistance [0.1 mΩ], channel 7	0…65535 ***(0)*** (0…6553.5 mΩ)
1	233/234	Initial calibration resistance [0.1 mΩ], channel 0	0…65535 ***(0)*** (0…6553.5 mΩ)
1	235/236	Initial calibration resistance [0.1 mΩ], channel 1	0…65535 ***(0)*** (0…6553.5 mΩ)

Slot	Index	Parameter	Range of values
1	237/238	Initial calibration resistance [0.1 mΩ], channel 2	0…65535 ***(0)*** (0…6553.5 mΩ)
1	239/240	Initial calibration resistance [0.1 mΩ], channel 3	0…65535 ***(0)*** (0…6553.5 mΩ)
1	241/242	Initial calibration resistance [0.1 mΩ], channel 4	0…65535 ***(0)*** (0…6553.5 mΩ)
1	243/244	Initial calibration resistance [0.1 mΩ], channel 5	0…65535 ***(0)*** (0…6553.5 mΩ)
1	245/246	Initial calibration resistance [0.1 mΩ], channel 6	0…65535 ***(0)*** (0…6553.5 mΩ)
1	247/248	Initial calibration resistance [0.1 mΩ], channel 7	0…65535 ***(0)*** (0…6553.5 mΩ)

8.9 Undervoltage detection

Trouble-free operation of the temperature controller is guaranteed within the line voltage and 24 VDC supply voltage tolerances specified in section 13 "How to order" on page 62.
If the 24 VDC supply voltage drops below the permitted lower limit, the controller is switched to standby mode. No more heatsealing processes take place and no more measuring impulses are generated. Normal operation is resumed when the input voltage returns to the specified tolerance range again.
Standby mode is indicated by 0…3 °C (i.e. approx. 0 V) at the analog output. In addition, the SA bit is set in the status word for the cyclic output data.

Trouble-free operation of the controller is only guaranteed within the specified tolerance range of the input voltage. An external voltage monitor must be connected to prevent low line or 24 VDC supply voltage from resulting in defective heatseals.

8.10 Temperature display (actual value output)

The RES-5006 sends to the terminals 17+18 an analogue signal 0…10 VDC, which is proportional to the real ACTUAL temperature.

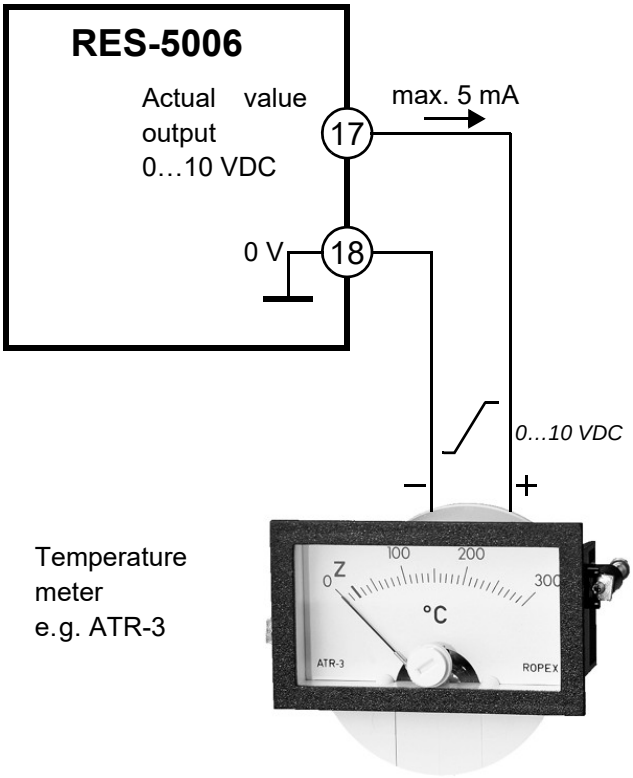

Voltage values:
0 VDC → 0 °C
10 VDC → 300 °C (ATR-3) or 500 °C (ATR-5), depending on the device configuration.
The correlation between the change in the output voltage and the ACTUAL temperature is linear.

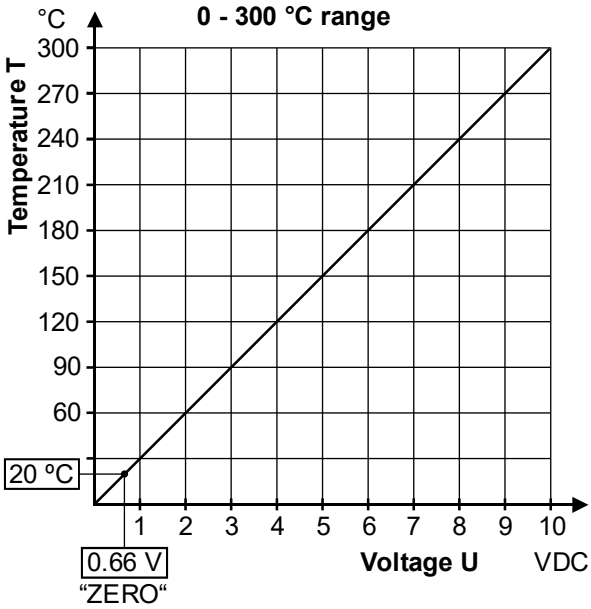

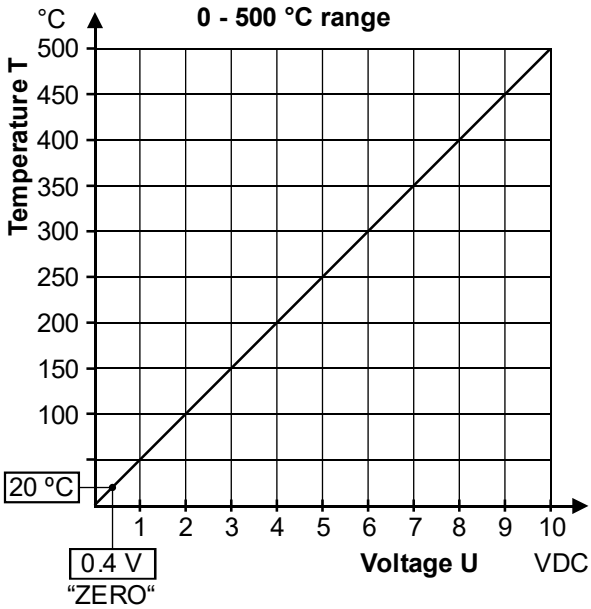

A display instrument can be attached to this output for visualisation of the heating element temperature.

The ROPEX temperature display ATR-x in its overall characteristics (size, scaling, dynamic behaviour) is optimally suited for this use and can be used for this, if needed (↳ section 13 "How to order" on page 62).
With this display, not only can TARGET-ACTUAL comparisons be made, but other criteria can be evaluated, such as heat-up speed, reaching the setpoint in the specified time, cooling of the heating element, etc.
Beyond that, malfunctions in the control circuit (loose connections, contacting and wiring problems) and possibly network faults can be observed very well at the display instrument and interpreted accordingly. This applies also for mutual influencing of several neighbouring control circuits.
In case of alarm, this analogue output is used to output differentiated error messages (↳ section 8.19 "Error messages" on page 53).

8.11 Booster connection

The controller RES-5006 has a connection for an external switching amplifier (booster) as standard. This connection (at the terminals 15+16) is required at high primary currents (constant current > 5 A, impulse current > 25 A). The switching amplifier must be connected in accordance with section 6.7 "Connection diagram with booster connection" on page 15.

The connection line to the external switching amplifier must not exceed a length of 1 m and must be twisted to avoid EMC interference.

8.12 USB interface for visualisation software ROPEXvisual®

A USB interface (type micro-USB) is available for system diagnosis and process visualisation. A data connection can be built up with the ROPEX visualisation software ROPEXvisual® over this USB interface.

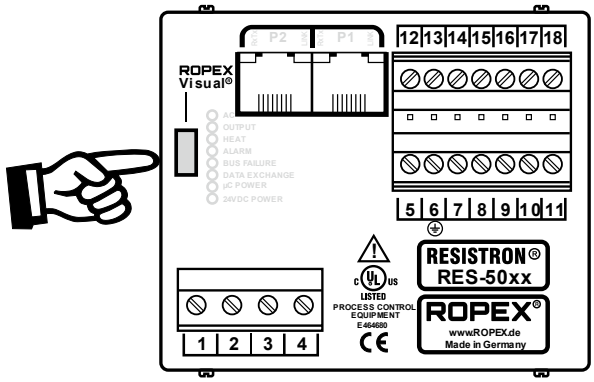

There is a separate documentation available for the ROPEX visualisation software. The software and the documentation are available in the download area (search term: “Visual”).

8.13 AUX interface

Internal interface for diagnosis and maintenance. The interface is currently not available.

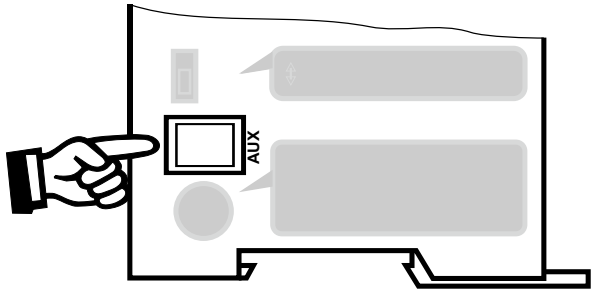

8.14 Total cycles counter

The number of sealing cycles performed (ST bit = 1) since delivery is stored in the controller. This counter can only be displayed. Resetting of the counter is not possible. Display is possible with the ROPEX visualisation software (↳ section 8.12 "USB interface for visualisation software ROPEXvisual®" on page 50) or over the acyclical services of the PROFIBUS interface.

8.15 Operating hours counter

The operating hours since delivery are stored in the controller. This counter works with an accuracy of 6 minutes and can only be displayed. Resetting of the counter is not possible. Display is possible with the ROPEX visualisation software (↳ section 8.12 "USB interface for visualisation software ROPEXvisual®" on page 50) or over the acyclical services of the PROFIBUS interface.

8.16 Data storage for error messages and AUTOCAL

To make error diagnosis easier in ongoing operation, the controller RES-5006 has data storage for error messages (↳ section 8.19 "Error messages" on page 53) and executed AUTOCAL procedures (↳ section 8.5.2 "AUTOCAL autom. zeroing (AC)" on page 27).
The last 400 messages are stored. These can be read out and displayed with the ROPEX visualisation software (↳ section 8.12 "USB interface for visualisation software ROPEXvisual®" on page 50) or through the integrated Web server.
The RES-5006 also has an integrated clock (↳ section 8.17 "Integrated clock (date and time)" on page 51). The messages are then stored with the date and time specified (time stamp).

The stored messages can be exported as a csv-file. If needed, ROPEX can evaluate the exported file and create an error diagnosis.

8.17 Integrated clock (date and time)

The RES-5006 has an integrated clock. The messages are stored in data storage (↳ section 8.16 "Data storage for error messages and AUTOCAL" on page 51) with the date and time specified (time stamp). This permits a more precise identification of error messages, such as when problems have to be analysed.

The integrated clock can be set and read out through the ROPEX visualisation software (↳ section 8.12 "USB interface for visualisation software ROPEXvisual®" on page 50) or through acyclical services of the PROFIBUS interface. The time and date can only be read out over the integrated Web server.
A maintenance-free condenser is used for operation of the clock. There is no installed battery that has to be changed.
The controller must be switched on for at least 3 hours to charge the clock condenser completely. When the controller is switched off, a fully charged condenser can operate the clock for approx. 2…4 weeks. If the controller is switched off longer, the date and time must be set again. This can be done with the ROPEX visualisation software(↳ section 8.12 "USB interface for visualisation software ROPEXvisual®" on page 50) or through acyclical services of the PROFIBUS interface.
The condenser is discharged when shipped from the factory. During initial start-up of the controller, the clock must be set when the error messages in the data storage (↳ section 8.16 "Data storage for error messages and AUTOCAL" on page 51) are to be stored with date and time.
Operation of the controller is possible without the clock being set. Then only invalid values for date and time are stored in the data storage (↳ section 8.16 "Data storage for error messages and AUTOCAL" on page 51). The behaviour of the temperature controller is not influenced by this.

8.18 System monitoring/alarm output

To increase operational safety and avoid incorrect sealing, this controller has hardware and software measures for differentiated error messages and diagnosis. Both the outer wiring and the internal system are monitored thereby.
This feature helps the operator considerably in localising a defective operating status.
A system malfunction is reported or differentiated through the following elements.

A.) Red “ALARM” LED at the controller lights up with three statuses:

1. **Flashes quickly (4 Hz):**
   Means that the AUTOCAL function should be performed (error no. 8+9 or 104…106, 211, 302, 303).
2. **Flashes slowly (1 Hz):**
   Means that the system configuration is incorrect, and therefore the executed zeroing (AUTOCAL function) was not successful (↳ section 7.2 "Device configuration" on page 16).This corresponds to the error numbers 10…12, or 111…114.
3. **Lights up continuously:**
   This displays that malfunctions are present that present an initial start-up (error no. 1…7, or 101…103, 107, 108, 201…203, 307, 308, 9xx).
   These are usually external wiring errors.

B.) Alarm relay (relay contacts terminals 12+13+14):
In the factory setting, the alarm relay is:

- **NOT ACTIV** in the operating statuses A.1 and A.2, but is activated again when a START signal is issued in this status.
- **ACTIVE** in case A.3.

If the alarm relay is configured differently than in the factory setting (↳ section 7.2.4 "Configuration of the alarm relay" on page 18), these statuses are inverted.

C.) Output of the error numbers over the PROFIBUS protocol
If there is an error, the AL bit is set. The error number is displayed in the compact protocol instead of the actual value in bit 0…3, in the expanded and complete protocol in the second word at bit position 8…11 (↳ section 8.6.14 "Error numbers" on page 32).

D.) Output of the error number over actual value output 0…10 VDC (terminal 17+18):
As a temperature display is not required in case of malfunction, the actual value output is used to output the error in case of alarm.
Offered for this purpose, within the 0…10 VDC range, are 13 voltage levels, each of which has one error number assigned. (↳ section 8.19 "Error messages" on page 53).
For statuses that require AUTOCAL, or when the device configuration is not correct (error no. 8…12, or 104…106, 111…114, 211, 302, 303), the actual value output switches back and forth between the voltage value that corresponds to the error and the end value (10 VDC, i.e 300 °C or 500 °C) with 1 Hz. If the START signal is output during these statuses, the voltage value no longer changes.
An alarm message can be reset by activating the RS bit or by switching the controller off and on.
Resetting the alarm message using the RS bit becomes effective only when the RS bit is deactivated.
Invalid alarm messages can occur when the controller is switched off due to the undefined operating status. This must be considered in evaluating the higher-level controller (e.g. PLC) to avoid false alarms.

8.19 Error messages

Besides the error diagnosis coded in the protocol, the PROFIBUS diagnosis (expanded device diagnosis) can also be accessed. The error numbers appear as plain text in the project design tool, as they are stored in the GSD file. The following table shows the assignment of the output error numbers to the errors that occur. In addition, the cause of the errors and the necessary measures to remedy them are described.
The simplified circuit diagram in section 8.20 "Error ranges and causes" on page 57 permits fast and efficient error remedy.
Thirteen voltage levels for diagnosing errors appear at the RESISTRON® temperature controller's actual value output. The error messages are even more finely differentiated internally. The 3-digit error codes described below can be displayed via the PROFIBUS interface or in the ROPEX visualization software (↳ section 8.12 "USB interface for visualisation software ROPEXvisual®" on page 50). The error search can thus be performed even more effectively.

Evaluation of the actual value output for detection of an error message - e.g. in the higher-order controller - must be done with an adapted tolerance window to avoid incorrect evaluations. The tolerances of the actual value output must be observed (↳ section 10 "Technical data" on page 59).

Part 1 of 3: Error messages (malfunctions)

NOTE: The specified error messages are output as malfunctions (actual value output emits constant error voltage; alarm LED is continuously lit; alarm relay is active).

Error no.		Actual value output Voltage [V]	Cause	Measure if initial start-up	Measure if machine in operation, heating element not changed
1	101	0.66	Current signal missing	Error range ①	Error range ①
2	102	1.33	Voltage signal missing	Error range ③	Error range ③
3	103	2.00	Voltage and current signals missing	Error range ②	Error ranges ②⑨
4	107	2.66	Temperature jump downward	Error ranges ④⑤⑥ (“Loose connection”)	Error ranges ④⑤⑥ (“Loose connection”)
	108		Temperature jump upward		
	307 308 309 310		Temperature too low/high (↳ chap. 8.7.12)	-	-
5	201	3.33	Network frequency missing/ fluctuates	Check network	Check network
	202		Network frequency too large/ fluctuates		
	203		Network frequency too small/fluctuates		
6	304	4.00	Heat-up time too long (↳ chap. 8.7.13)	Perform **RESET**	Perform **RESET**
7	901	4.66	Network voltage/synchronising signal missing	Replace device	Replace device
	913		Triac defective	Replace device	Replace device
	914 915 916		Int. error, device defective	Replace device	Replace device
	917 918		Slide switch for alarm output incorrect	Check slide switch	Check slide switch

Part 2 of 3: Error messages (warnings)

NOTE: The specified error messages are first output as warnings (actual value output switches between two values; alarm LED flashes; alarm relay is not active). After the START signal is activated, it is output as a malfunction (actual value output no longer changes, see bold-italic values; alarm LED is permanently lit; alarm relay is active).

Error no.		Actual value output Voltage [V]	Cause	Measure if initial start-up	Measure if machine in operation, heating element not changed
8	104	***5.33*** ↔ 10	Current signal incorrect Impulse transformer incorrectly sized	Perform **AUTOCAL,** Check transformer specification, Error ranges ⑦⑧	Error ranges ④⑤⑥ (“Loose connection”)
	105		Voltage signal incorrect Impulse transformer incorrectly sized		
	106		Voltage and current signal incorrect Impulse transformer incorrectly sized		
	302		Temperature too low Calibration not performed Loose connection Ambient temperature fluctuates	Perform **AUTOCAL** and/or Error ranges ④⑤⑥ (“Loose connection”)	
	303		Temperature too high Calibration not performed Loose connection Ambient temperature fluctuates		
9	211	***6.00*** ↔ 10	Data error	Perform **AUTOCAL**	Perform **AUTOCAL**

Part 3 of 3: Error messages (warnings)

NOTE: The specified error messages are first output as warnings (actual value output switches between two values; alarm LED flashes; alarm relay is not active). After the START signal is activated, it is output as a malfunction (actual value output no longer changes, see bold-italic values; alarm LED is permanently lit; alarm relay is active).

Error no.		Actual value output Voltage [V]	Cause	Measure if initial start-up	Measure if machine in operation, heating element not changed
10	111	***6.66*** 10	Current signal incorrect, Calibration not possible	Error range ⑧, Check configuration	Error ranges ④⑤⑥ (“Loose connection”)
11	112	***7.33*** 10	Voltage signal incorrect, Calibration not possible	Error range ⑦, Check configuration	Error ranges ④⑤⑥ (“Loose connection”)
12	113	***8.00*** 10	Voltage/current signal incorrect, Calibration not possible	Error ranges ⑦⑧, Check configuration	Error ranges ④⑤⑥ (“Loose connection”)
13	114	***8.66*** 10	Temperature fluctuates, Calibration not possible	Perform **AUTOCAL** and/or Error ranges ④⑤⑥ (“Loose connection”)	Perform **AUTOCAL** and/or Error ranges ④⑤⑥ (“Loose connection”)
	115		Ext. calibration temperature too large, Calibration not possible	Perform **AUTOCAL** with ext. calibration temperature ≤40 °C	Perform **AUTOCAL** with ext. calibration temperature ≤40 °C
	116		Ext. calibration temperature fluctuates, Calibration not possible	Perform **AUTOCAL** with stable ext. calibration temperature	Perform **AUTOCAL** with stable ext. calibration temperature

8.20 Error ranges and causes

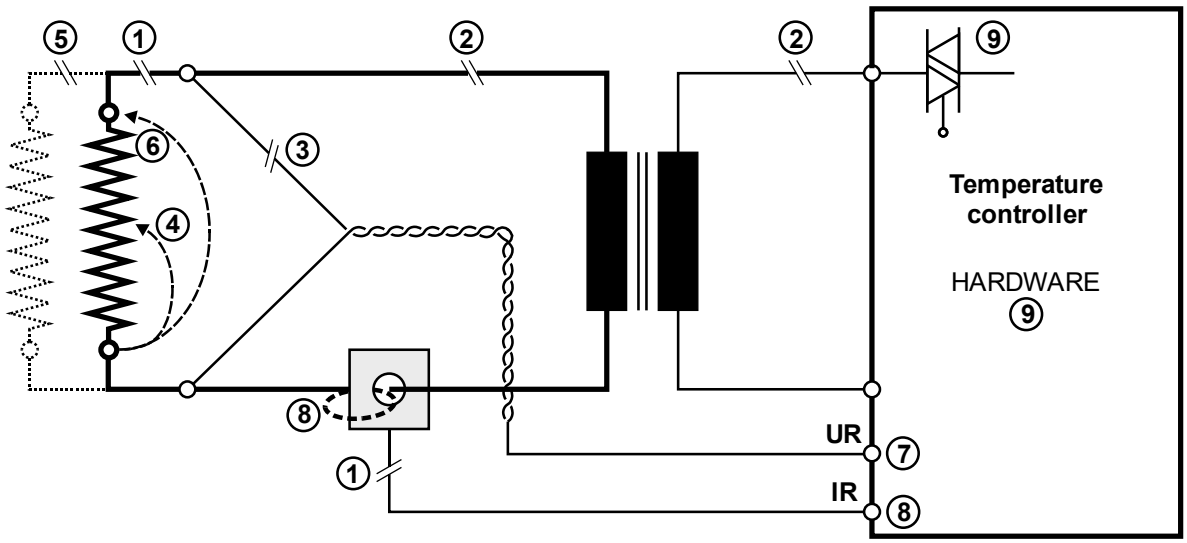

Explanations of the possible error causes can be taken from the following table.

Malfunction range	Explanations	Possible causes
①	Interruption of the load circuit after the U_R pickup point	- Wire break, heating element break - Contacting at the heating element defective
	Interruption of the signal from the transformer	- I_R measurement line from the transformer interrupted
②	Interruption of the primary circuit	- Line break, Triac defective in the controller, - Primary coil of the impulse transformer interrupted - Kb fuse open
	Interruption of the secondary circuit in front of the U_R pickup point	- Wire break - Primary coil of the impulse transformer interrupted
③	U_R signal missing	- Measurement line interrupted
④	Partial short circuit (Delta R)	- Heating element is partially bridged through a conducting part (hold-down device, safety rail, etc.)
⑤	Interruption of the parallel circuit	- Wire break, heating element break - Contacting at the heating element defective
⑥	Complete short circuit	- Heating element incorrectly installed, insulation at the head of the rail missing or incorrectly installed - Conducting part bridges heating element completely
⑦	U_R signal incorrect	- U_2 outside of the permitted range of 0.4…120 VAC
⑧	I_R signal incorrect	- I_2 outside of the permitted range of 30…500 A
	Coils through transformer incorrect	- Check number of coils (for current < 30 A, two or more coils are required)

Malfunction range	Explanations	Possible causes
⑨	Internal device error/no network voltage	- Hardware error (replace controller) - Slide switch for alarm relay defective or not in correct position - Network voltage missing

9 Factory settings

The RESISTRON® temperature controller RES-5006 is configured as follows from the factory:

Rotary encoder switch for Heating element alloy and Temperature range	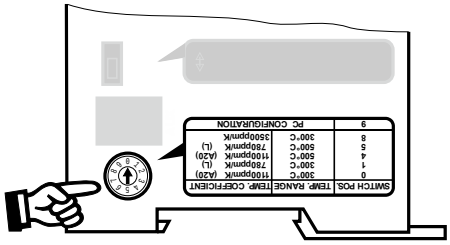	Heating element alloy: Alloy A20 Temperature range: 300 °C Rotary encoder switch: Position “0”
Slide switch for Alarm relay	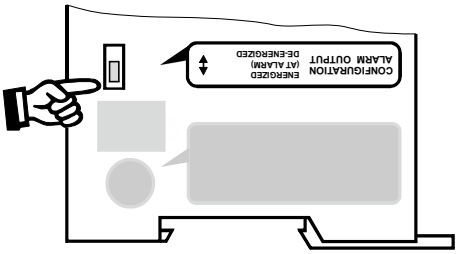	Alarm relay active in case of alarm
Rotary encoder switch for Station address	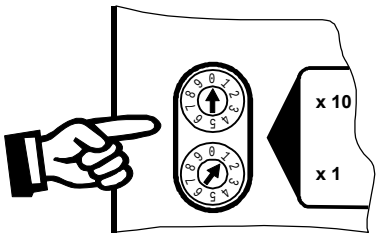 Top of housing	Station address = 01_{dec}
Automatic Phase correction (AUTOCOMP) [X]		AUTOCOMP: off
Temperature diagnosis [X]		Temperature diagnosis: deactivated
Heat-up time monitoring [X]		Heat-up time monitoring: deactivated

[X] Parameterisation over GSD file or DPV1 protocol expansion

10 Technical data

Operation of the temperature controller outside of these technical specifications results in loss of warranty and can cause defects.

Design	Housing for electrical cabinet mounting On TS35 top hat rail (35mm) in accordance with DIN EN 50022 latchable Basic surface: 90x75 mm; depth: 135 mm (incl. connection terminals)
Network voltage	Connected between neutral conductor and an outside conductor: 110 VAC -15%…300 VAC +10% or Connected between two outside conductors: 110 VAC -15%…415 VAC +10% **The voltage between outside conductor and earth must not exceed 300 VAC.**
Power supply network	Symmetrical TN or TT network Overvoltage category III **Operation in voltage-free network (e.g. IT network) only after checking with ROPEX.**
Network frequency	47…63 Hz, automatic frequency adjustment in this range
Current consumption (Primary current of the impulse transformer)	I_{max} = 5 A (ED = 100%) I_{max} = 25 A (ED = 20%, duration of play 1 min)
24VDC power supply Terminal 5+7 or PROFIBUS plug, pin 2+7	24 VDC, Imax = 100 mA Tolerance: ±10% SELV or PELV supplied from maximum 300 VAC, Cat II The 24 VDC power supply can be supplied via terminal 5 and 7 or via the PROFIBUS plug at pin 2 and 7.
Measurement range	Secondary voltage U_R: 0.4…120 VAC Secondary current I_R: 30…500 A (with transformer PEX-W4/-W5) ↳ ROPEX application report
PROFIBUS DP interface	Baud rates: 9.6 kbit/s; 19.2 kbit/s; 45.45 kbit/s; 93.75 kbit/s; 187.5 kbit/s; 500 kbit/s; 1.5 kbit/s; 3 kbit/s; 6 kbit/s; 12 kbit/s I/O data length: Up to 4 bytes of input data Up to 8 bytes of output data Freeze mode, sync mode, clear mode, auto baud, configurable device parameters, data byte swapping, PROFIBUS address over rotary coding switch 1…99 or over set salve address 0…126 Correction plug according to IEC 61158

Heating element type and temperature range	Besides setting through the rotary encoder switch or the PROFIBUS interface (see below), the setting for the temperature range and temperature coefficient can be performed through the ROPEX visualisation software (↳ section 8.12 "USB interface for visualisation software ROPEXvisual®" on page 50): Temperature range: 200 °C, 300 °C, 400 °C or 500 °C Temperature coefficient: 400…4000 ppm/K (variable setting range) Five areas can be set over rotary coding switches or PROFIBUS interface: Temperature coefficient 1100 ppm/K, 0…300 °C (e.g. alloy A20) Temperature coefficient 780 ppm/K, 0…300 °C (e.g. alloy L) Temperature coefficient 1100 ppm/K, 0…500 °C (e.g. alloy A20) Temperature coefficient 780 ppm/K, 0…500 °C (e.g. alloy L) Temperature coefficient 3500 ppm/K, 0…300 °C (e. g. LEX3500) Please take the necessary setting from the ROPEX application report
Analogue output (Actual value) Terminal 17+18	0…10 VDC, I_{max} = 5 mA corresponding to 0…300 °C or 0…500 °C Precision: ±1% plus 50 mV
Alarm relay Terminals 12, 13, 14	U_{max} = 30 V (DC/AC), I_{max} = 1 A, changeover contact, voltage-free
Power loss	Max. 20 W
Ambient conditions	Maximum altitude 2000 m Ambient temperature: +5…+45 °C Maximum relative humidity: 80% at temperatures up to +31 °C, decreasing linearly to 50% relative humidity at +45 °C.
Degree of protection	IP 20
Mounting	If several devices are mounted on a hat rail, a minimum distance of 20 mm must be maintained. 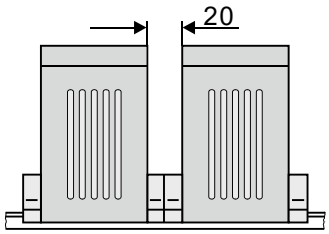 When mounting on a horizontal top hat rail, the movable latch, which is necessary for fastening, must face downward. When mounting on a vertical top hat rail, end holders must be installed on both sides to fasten the controller mechanically.
Weight	Approx. 0,7 kg (incl. plug-in connector parts)
Housing material	Plastic, polycarbonate, UL-94-V0
Connecting cable Type / cross-sections	Rigid or flexible; 0.2…2.5 mm² (AWG 24…12) through pluggable terminals Pluggable terminals: Tightening torque: 0.5…0.6 Nm (Screwdriver: SZS 0.6x3.5 mm) ⚠ **If ferrules are used, they must be crimped in accordance with DIN 46228 and IEC/EN 60947-1. Otherwise, correct electrical contact in the terminals is not guaranteed.**

11 Dimensions

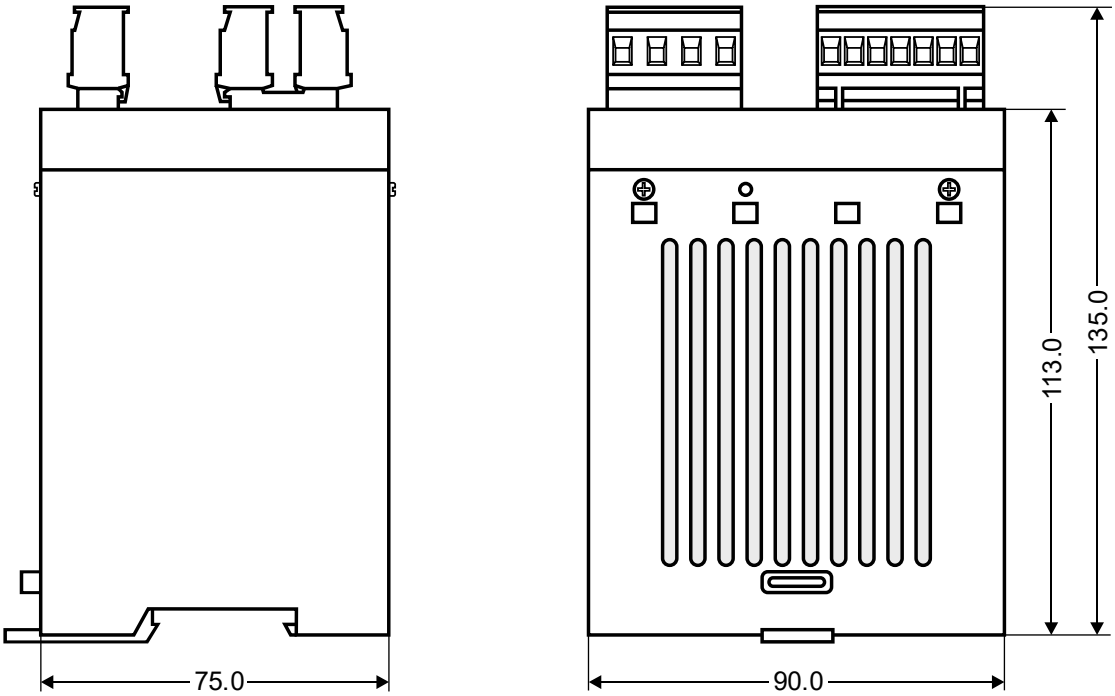

12 Modifications (MODs)

The RESISTRON® temperature controller RES-5006 is suitable for very many sealing applications due to its universal design.
A device modification (MOD) is available for the RESISTRON® temperature controller RES-5006 to implement special applications.
The modifications must be ordered separately.

MOD 01

Supplemental booster for small secondary voltages (U_R = 0.2…60 VAC). This modification is necessary for very short or low-resistance heating elements, for example.

13 How to order

Illustrations are examples.

	Controller RES-5006 Art. no. 7500600 Scope of delivery: Controller includes plug-in connector parts (without current transformer) **Modification MOD . . (Optional, if necessary)** For example **01**: MOD 01, art. no. 800001 (booster for small voltage) The article numbers of the controller and of the desired modification (optional) must be specified when ordering. e.g. RES-5006 + MOD 01 (controller with booster for low voltage) Order of art. no. 7500600 + 800001
	Current transformer PEX-W5 Art. no. 885107
	Monitoring current transformer MSW-2 Art. no. 885212
	Network filter LF- . . . . . **06480**: Continuous current 6 A, 480 VAC, art. no. 885500 (with UL certification) **10520**: Continuous curr. 10 A, 520 VAC, art. no. 885504 (with UL and CSA certification) **35480**: Continuous curr. 35 A, 480 VAC, art. no. 885506 **50520**: Continuous curr. 50 A, 520 VAC, art. no. 885509 (with UL and CSA certification)
	Impulse transformer For design and order specifications, see ROPEX application report Design in accordance with EN 61558 Available with UL certifications and thermal switch, if necessary. In addition, we can individually design and offer you an upstream transformer.
	Temperature display ATR- . **3**: 300 °C range, art. no. 882130 **5**: 500 °C range, art. no. 882150

	Booster B- . . . **075415**: Impulse loaded 75 A, 415 VAC, art. no. 885302 **100400**: Impulse loaded 100 A, 400 VAC, art. no. 885304
	Lines For design and order specifications, see ROPEX application report

14 Index

Numbers
24 VDC power supply *59*

A
AA bit *30*
AC bit *28*
Actual value *32*
Actual value output *49*
AG bit *30*
AL bit *20*, *30*
Alarm *30*
Alarm code format *37*
Alarm output *52*
Alarm relay *18*, *60*
Alloy *17*, *20*
Ambient conditions *60*
Ambient temperature *60*
Application Report *12*
Application report *9*
AUTOCAL *8*, *19*
  active *30*
  blocked *28*, *30*
  start *28*
AUTOCOMP *37*
Automatic phase correction *37*
Automatic zeroing *8*, *19*, *27*
AUTOTUNE *8*
AUX interface *51*

B
Booster *15*, *63*
Booster connection *50*
Burning in the heating element *18*, *20*

C
Changing the heating element *19*, *20*
Circuit-breaker *11*
Commissioning *16*, *19*
Connection diagram *14*, *15*
Current transformer *12*, *62*

D
Data format *36*
Data storage *51*
Date *51*
Degree of protection *60*
Design *59*
Device diagnosis *36*
Device view *16*
Dimensions *61*
Disposal *5*
DPV1 protocol expansion *42*

E
Error diagnosis *8*
Error messages *53*
Error number format *33*, *37*
Error ranges *57*
Expanded device diagnosis *36*
External switching amplifier *15*

F
Factory settings *58*
Fuse *11*

G
GSD file *22*

H
Heating element type *60*
Heat-up time monitoring *39*
High altitude *60*
Humidity *60*

I
Impulse transformer *11*, *62*
Input data *27*
Installation *8*
Installation rules *8*

L
Line filter *4*, *11*, *12*

M
Maintenance *5*
Measurement impulse duration *36*
Measurement interruption *32*
Measurement pause *29*
Measurement range *59*
Modification (MOD) *61*, *62*
Monitoring current transformer *62*
Mounting *60*
MP bit *29*
MSW-2 *62*
MU bit *32*

N
Network filter *62*
Network frequency *8*, *59*
Network voltage *59*

O
Operating hours counter *51*
Output data *30*
Over-current protection *11*

P

PEX-W4/-W5 *4*, *12*
PEX-W5 *62*
Phase correction *37*
Power loss *60*
Power supply *11*
Power supply network *59*
PROFIBUS DP interface *59*
Protocol
- compact, 10-bit alarm code *24*
- compact, 4-bit alarm code *23*
- complete, 10-bit alarm code *26*
- complete, 4-bit alarm code *26*
- expanded, 10-bit alarm code *25*
- expanded, 4-bit alarm code *24*

R

RA bit *20*, *32*
Regulation active *32*
Reset *28*
ROPEXvisual *50*
RS bit *28*

S

Setpoint *30*
Setup stipulations *9*
Standby mode *48*
Start *28*
START bit *20*
System diagnosis *50*
System monitoring *52*

T

TCR *4*, *18*
TCR Calculator *35*
TE bit *30*
Temperature coefficient *4*, *18*
Temperature diagnosis *38*, *39*
Temperature display *49*, *50*, *62*
Temperature OK *31*
Temperature range *17*, *60*
Temperature reached *30*
Temperature regulation *7*
Thermal impulse process *7*
Time *51*
Time stamp *51*
TO-Bit *31*
Total cycles counter *51*
Transformer *4*, *11*, *62*
Transportation *5*

U

Undervoltage detection *48*
USB interface *50*
Use *7*

V

Visualisation software *50*

W

WA bit *30*
Wiring *9*, *11*